EN

CASTELLINI

TREATMENT
SKEMA 5

MAKING SPACE FOR EXCELLENCE

SKEMA 5

SMALL FOOTPRINT AND MOBILITY COMBINED

Skema 5 gives doctors the peace of mind they need to get through their workday. Designed to meet the needs of the most versatile dentists, the over-the-patient model is compact, thereby ensuring operational comfort, and provides new and appealing ergonomic solutions.

Sleek design to help you work better.

SKEMA 5 CP

REFINED COMFORT

For dentists who use instruments with hanging tubes, the new design of the module and the arm system ensure balance and mobility. Practical in every situation, Skema 5 CP is also provided with a flexible assistant's module mounted on an articulated arm.

Balance and versatility for every need.

SKEMA 5 ORTHO

THE RIGHT SPACE FOR ORTHODONTICS

Castellini has created Skema 5 ORTHO, a model specifically designed for orthodontists which provides support to the doctor's specific needs during orthodontic treatments. Equipped with a wide tray holder and movable arms, it allows the dentist to easily reach any necessary instrument or material. The assistant's side is also duly equipped and can house up to 2 dynamic instruments controlled from a convenient display.

Always suited to the specialist's needs.

AMAZING VERSATILITY IN ANY POSITION

Featuring great versatility, Skema 5 allows the doctor to operate by moving the instrument module to the position best suited for the surgical procedure being performed. Every element is engineered to combine a slender design with a compact working unit. The lightness of the module and the excellent mobility of the arm system facilitate the workflow and improve the operating comfort of the medical staff.

DENTIST'S MODULE

The dentist's module with over-the-patient delivery is light and easy to move. The doctor can adjust the instruments' vertical positioning by lightly touching the optional handle-mounted sensor for greater comfort. The optional end-of-stroke lock system creates enhanced freedom of movement.

TRANSTHORACIC POSITION

Thanks to the mobility of the arm system, the doctor can position the dentist's module also on the assistant's side. The operational versatility of Skema 5 is the key feature that makes the dental unit perfect for those who progress every day in the practice of dentistry, dealing with multiple therapeutic needs, either with or without the assistant's help.

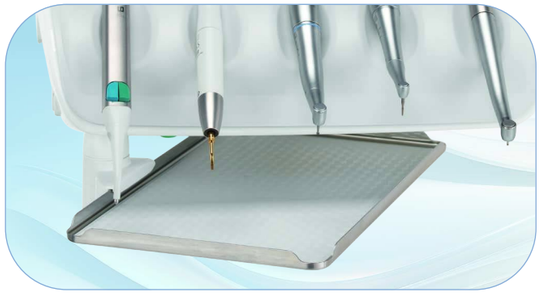

COMPACT TRAY HOLDER

The stainless-steel tray holder is compact and can rotate to be within easy reach of the medical staff. It can be easily removed from the swivel support for sanitisation purposes.

BALANCED INSTRUMENTS

The instruments are self-balanced to avoid any traction on the dentist's wrist, while the tubes feature increased extension capacity to minimise unnecessary movements in the operating field.

COMPACT AND MOVABLE ELEMENTS

Featuring great versatility, Skema 5 allows the doctor to operate by moving the instrument module to the position best suited for the surgical procedure being performed. Every element is engineered to combine a slender design with a compact working unit. The lightness of the module and the excellent mobility of the arm system facilitate the workflow and improve the operating comfort of the medical staff.

DENTIST'S MODULE

Instruments are easier to grasp thanks to their layout and the difference in tilt between central instruments and outer ones. Holders have been designed to aid instrument re-positioning and maximise stability. The sixth instrument can be integrated on the side of the module. The dentist can choose between intraoral camera and curing light, but the application is not available if the Zen-X X-ray sensor is installed.

CERAMIC POSITION-ADJUSTABLE CUSPIDOR BOWL

The position of the ceramic cuspidor bowl can be adjusted for greater comfort, while cup filling is completely automated thanks to the optional optical sensor, thereby giving more autonomy to the patient.

ASSISTANT'S MODULE

The assistant's module, fitted on a vertically-adjustable double arm, adapts to any working method and is available with 4 or 5 holders. In addition to syringe and suction cannulae, it is also possible to add a camera and a curing light or a dynamic instrument. An optional position-adjustable tray holder is also available.

INTUITIVE AND PRACTICAL TOUCH-SCREEN DISPLAY

In addition to being intuitive and easy-to-use, the LCD control panel is equipped with a touch-screen monitor that allows the doctor to use the simple gestures of modern technologies. Clear data visualisation and the possibility to quickly set the user's preferences for the operating parameters make the new control panel on Skema 5 a full-fledged and practical tool. Ideal for conservative dentistry and endodontics.

LAEC - INTEGRATED APEX LOCATOR

The device helps the dentist locate the root apex via an audio-visual indicator. Combined with the EVO E4 contra-angle, it also integrates the APEX-STOP function which automatically switches the bur off upon reaching a set safety threshold.

EVO E4 CONTRA-ANGLE

Suitable for any type of endodontic treatment, the device features the Castellini apex locator APEX-STOP function.

EVERYTHING FOR ENDODONTICS

Together with a dedicated contra-angle, Skema 5 integrates software and features that support endodontics and all the operations related to it. Moreover, the software lets dentists precision-manage operating parameters.

For all traditional endodontic procedures, the control panel can be used to automatically set and save optimal operating values.

INSTRUMENTS FOR ALL YOUR CLINICAL NEEDS

The integration of the instruments is key to optimising workflows at the patient chair. The dentist can easily set the operating parameters from the new touchscreen. Every step is intuitive and the level of customisation, together with the quality of the handpieces developed by Castellini, ensures the efficacy and efficiency of any treatment.

IMPLANTOR LED FLUO

Outstanding performance from this brushless micromotor. With a suitable contra-angle, it can also be used for endodontics. This now-quieter micromotor features tubes that improve handling. It is also available with the optional FIT (Fluorescence-aided Identification Technique) function that lets users detect the presence of composite materials with a special LED light. This technology makes tasks in the conservative, orthodontic and aesthetic fields more precise.

Implantor LED FLUO doesn't just highlight the composite fillings, differentiating it from the natural structure of the tooth: it also highlights brackets on fixed braces and the invisible attachments used to secure transparent corrective braces.

T-LED

T-LED has an emission spectrum for activation of the latest-generation composites. It features a swivel grip and a user-friendly interface. The bracket programme - one of the seven available - consists of 5 brief rapid-succession emissions.

HANDY POWER

Handy Power is an extremely lightweight, compact brushless micromotor, ideal for conservative and prosthetic dentistry. Requires only minimal maintenance thanks to the exceptional reliability of brushless technology. Available with or without LED lighting, and with or without the FIT fluorescent function.
Fluorescence-aided identification speeds up the removal of composite materials, which are more and more widely used and increasingly difficult to detect if properly applied.

PIEZOLIGHT 6 / PIEZOSTERIL 6

Available with LED lighting and fully autoclavable, ultrasound handpieces are suitable for prophylaxis, endodontics and periodontal procedures. Ultrasound vibrations are linear and controlled. There are no parasitic lateral vibrations. Constant control and self-adjustment of frequency according to load and the condition of the tip. Irrigation flow can be fine-adjusted via a special dial.

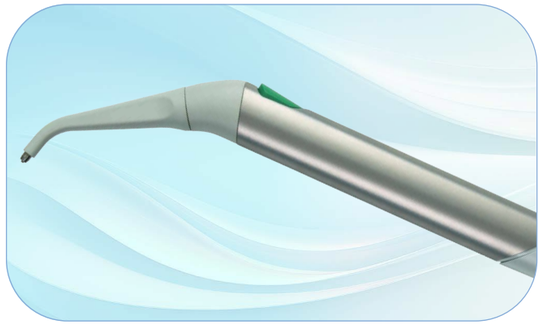

SYRINGE

Featuring a streamlined and easy-to-handle design, the syringe is available both in the three-way and the optional six-way version. The handle and tip are autoclavable.

SILENT POWER TURBINE AND GOLDSPEED CONTRA-ANGLES

Castellini offers a complete set of turbines and contra-angles suitable for all fields of dentistry.

WELLBEING AND PRACTICALITY

The patient's wellbeing is vital to ensure a good treatment outcome. Functional ergonomics also makes the medical team's work easier. And there's more: today, the chair can incorporate a sensor that detects the patient presence, including a feature for automatically switching on and off the automatic light. It is also possible to instruct the system to switch to stand-by mode after the patient leaves to control energy consumption.

COMFORT STARTS HERE

The design of the seat and backrest increases the patient chair comfort. The backrest features a highly resistant structure with soft padding and hard-wearing, easy-to-clean upholstery. Chair movements are designed to avoid uncomfortable compression in the lumbar area. The shape of the backrest streamlines access to the operating zone both in frontal view and indirect vision mode. Castellini has designed a system to give dentists greater freedom of choice in terms of where to position the dental unit inside the surgery to match the existing connections. Depending on the floor outlets and their position, the dental unit can be installed using the connection located directly under the leg rest or the one under the front part of the unit body.

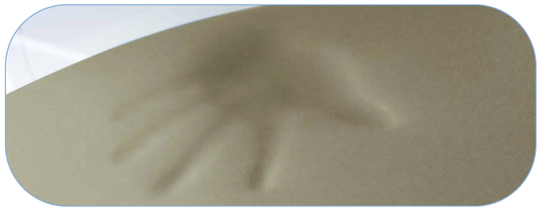

Available as an optional feature, the Memory Foam upholstery adapts to patients of any build, ensuring proper anatomical support and maximum comfort at all times.

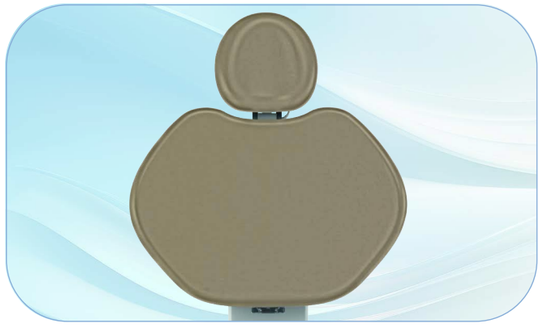

NORDIC BACKREST

A backrest designed for those who want to offer patients sturdy arm and elbow support, allowing excellent access for dentists who work in the 12 o'clock position.

PNEUMATIC HEADREST

Available as an optional, the exclusive pneumatic orbital headrest pivots on three axes and allows for quick, precise assisted positioning. Movement is activated by the button on the lower side of the headrest.

FOOTREST

The adjustable footrest allows for an easy and accurate disinfection.

LATERAL SLIDE FOOT CONTROL

Lets dentists control Chip Air and Chip Water functions on the instrument in use, invert rotation of the micromotor, control patient chair movement and recall saved positions. Wired and wireless versions available.

PRESSURE-OPERATED FOOT CONTROL

Provides the same functions as the lateral slide foot control. Wired and wireless versions available.

POWER PEDAL FOOT CONTROL

The third foot control includes all the functions of the previous models and is characterised by two additional elements to recall two more saved working positions. Wired and wireless versions available.

THE IMPORTANCE OF LIGHTING

Proper lighting of the operating field is an essential requirement. The LED lamps designed by Castellini ensure excellent lighting. In addition to the SCT Composite lamp, the Venus LED MCT lamp is available with settings that can be tailored according to circumstances.

VENUS PLUS SCT
VENUS PLUS SCT COMPOSITE

LED lamp equipped with 4 light sources, placed outside the reflector body, with intensity adjustable from 3,000 to 50,000 Lux. This creates a large spot-lit area, minimising shadows.

A further 2 central light sources generate a beam with different wavelengths: this prevents pre-polymerisation of composites while ensuring excellent illumination of the oral cavity.

In addition to a high Colour Rendering Index (>90), a large spot-lit area and removable, sterilisable handles, it also features an infrared sensor for switching on/off/ adjusting intensity.

VENUS LED MCT - VENUS LED MCT VIEW

The Venus LED MCT lamp rotates on three axes to ensure perfect lighting of the operating field whatever the task or position. The No Touch sensor can switch the lamp on/off and adjust light intensity up to 50,000 Lux.

Absolute colour fidelity thanks to a rendering that scores more than 95 on the Colour Rendering Index (CRI, scale 0-100).

The Venus LED MCT View combines a 4K camera with PC software to capture ultra-high-definition images and videos.

The Smart Focus system features liquid lenses, ensuring fast, optimal digital focusing.

COMPOSITE MODE

This feature changes the light wavelength to prevent the pre-curing of composite materials while ensuring optimum lighting of the operating field.

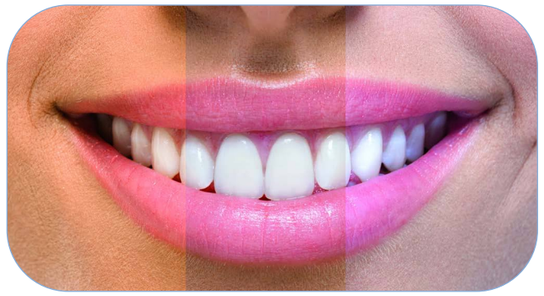

WARM, NEUTRAL AND COOL COLOUR

The innovative system makes it possible to provide just the right light for every clinical discipline, with 3 different temperature values: warm (4,300 K), neutral (5,000 K) or cool (5,500 K) light. All temperature variations can be activated with ease, ensuring a perfect view of the operating area according to the treatment being performed at all times.

THE SAFETY OF CERTIFIED SYSTEMS

Castellini's focus has always been on hygiene, reaffirming its commitment through close cooperation with the Department for Public Health and Infectious Diseases of the Sapienza University of Rome and the Department for Public Health and Paediatrics of the University of Turin. Thanks to in-depth research and the analyses performed, the dental unit can be set up with upgraded and certified systems that ensure a clinical environment that is safe all the time.

M.W.B.

Reliable and effective, the M.W.B. system, used in conjunction with Peroxy Ag+, acts against all water-borne contaminants, including Legionella. Tests carried out on a dental unit over a 3-month observation period showed that regular use of M.W.B. and daily execution of an intensive disinfection cycle with the Autosteril system ensure outstanding water hygiene quality, with bacterial loads kept to zero.

AUTOSTERIL

Skema 5 can be equipped with Autosteril, the high-standard automatic disinfection system, for all the spray water circuits. During the cycle, the instruments are stored in an inbuilt receiving area. Used together with Peroxy Ag+, the Autosteril system ensures a mycobactericide, bactericide and anti-Legionella action, certified by the Sapienza University of Rome. Analysis has demonstrated that the disinfection provided is sufficient to "eradicate all tested microbes from the piping of the dental unit, even with higher contamination levels." Autosteril helps sanitisation at the end of a day's session and allows short cycles to be performed via the following steps:

- circuit draining with compressed air;
- addition of 3% H_2O_2 to the spray water circuits;
- a liquid 'hold time' suitable for intensive disinfection;
- liquid expelled with compressed air;
- (mains or distilled) water flushing.

TIME FLUSHING

To drain stagnant fluid from piping after use, the Time Flushing feature carries out a complete water change with a timed flow of the feed fluid.

S.S.S. BOTTLE

The stand-alone supply system is equipped with a 1.8 litre capacity pressurised tank, easily accessible from outside to facilitate filling or replacement.

DESIGNED TO PROTECT YOU

During the design of the dental unit, any possible risk of contamination due to exposed areas and removable components is thoroughly investigated. Thanks to the analyses carried out, Skema 5 features multiple elements developed to protect patients and medical staff, thereby ensuring a safe and risk-free working environment.

S.H.D.

Flushing and sanitisation of the suction system with water and a special liquid take approximately 2 minutes: ideal as a between-patients cleaning procedure.

DETACHABLE INSTRUMENT TUBING

Removable and easily disinfectable, the tubes make cleaning and replacement tasks easier and faster.

REMOVABLE DENTIST'S MODULE HANDLE

Can be easily removed for maximum hygiene.

REMOVABLE LAMP HANDLES

Can easily be removed and autoclaved.

GLASS DISPLAY FILM

Disposable film to protect the assistant's keypad and Full Touch control panel.

CUSPIDOR BOWL

The cup-and-bowl-fill unit can easily be removed and sterilised in an autoclave. Note that the cuspidor bowl handle is removable and autoclavable.

FILTERS + UNIT BODY COVER

Stylishly protected by a cover, the filters can easily be removed to facilitate emptying and cleaning tasks.

ALL-ROUND EFFICIENCY

The main advantage provided by an inbuilt radiology and communication system is that it makes diagnostics faster by showing and sharing the information with the patient. In addition to the RXDC eXTend X-ray unit and to the module-embedded sensor, the multimedia system includes an inbuilt camera with HD sensor and extensive depth of field, and a 22” monitor. The system elements are supplied as an option.

INTEGRATED HD CAMERA

The integrated camera features streamlined design for better use inside the oral cavity, and an ergonomic handle. HD-quality images ensure perfect rendering and maximum investigation accuracy.

- Optical system with 7 glass lenses and 16:9 format HD sensor.
- Partially retroflexed 90° viewing angle.
- Depth of field from 5 to 70 mm.
- Freeze-frame activation via the touch-sensitive key.

The easy-to-attach and remove Macro Cap accessory magnifies up to 100x to deliver detailed, extremely sharp images.

The LED monitor is certified by the EEC Medical Devices Directive. An excellent multimedia communication allows for a better doctor-patient relationship.

ON-BOARD CHAIR DIAGNOSTICS

SIMPLICITY AND HEALTH

Thanks to the wireless handheld device that makes the radiological investigation easier and faster, and to the automatic setting of exposure parameters, the diagnosis is always the result of high-quality images combined with a minimal radiation dose delivered to the patient. The handheld device is equipped with a button to activate the unit and two simple settings to select the most suitable programme for perfect X-ray acquisition.

RXDC WITH EXTEND TECHNOLOGY

Thanks to extensive internal collimation and an extremely small focal spot, the X-ray unit provides high-quality images to ensure fast, accurate diagnosis.

X-RAY SENSOR

The integrated Zen-X sensor, available in two sizes, is housed in the dentist's module, thus speeding up acquisition of intraoral X-ray images. In a matter of seconds, the reprocessed image is displayed on both monitor and control panel.

22" LED MONITOR

The 16:9 monitor ensures a perfect view of the images thanks to its ergonomic design and to the special IPS panel that provides a wide viewing angle. The monitor can be integrated into the dental unit either with a single arm or a double-jointed arm for a more comfortable use.

A CONNECTED SURGERY

Simply by connecting to the internet with any browser, and without having to download any software, dentists and/or practice owners can access a website that offers a comprehensive range of digital services, remote assistance, video tutorials and updated user manuals for purchased models.

VIRTUAL ASSISTANT AND REMOTE MONITORING

Di.V.A. (Digital Virtual Assistant) optimises the workflow in advanced dental practices. In addition to being viewable on a PC, Di.V.A. can be easily consulted on smartphones and tablets.

In combination with Di.V.A., users can increase the efficiency of the practice by activating the EasyCheck service: each connected dental unit can rely on real-time remote diagnosis and technical support, vital for minimizing downtimes and ensuring continuity of service.

DASHBOARD

A simple dashboard lets the dentist monitor cart activity across all functions and analyse dental practice efficiency. In larger surgeries this is an excellent tool for managing heavy workloads and planning maintenance tasks.

Where the patient sensor is present, statistical data on how the dental unit is used can be collected and processed; the information is transmitted to Di.V.A. and displayed on the dashboard.

MONITORING HYGIENE SYSTEMS

Di.V.A. logs completed disinfection cycles, building up a database that is useful for in-practice assessment. This data also helps users estimate their consumption of disinfectant products and monitor the effective reactivation of equipment.

INSTRUMENT MODE

The dashboard lets users monitor effective usage of integrated instruments such as the micromotor; this includes detailed information on the employed work modes (conservative, endodontic and implantology).

easycheck

Di.V.A.
Digital
Virtual
Assistant

TECHNICAL SPECIFICATIONS

SKEMA 5

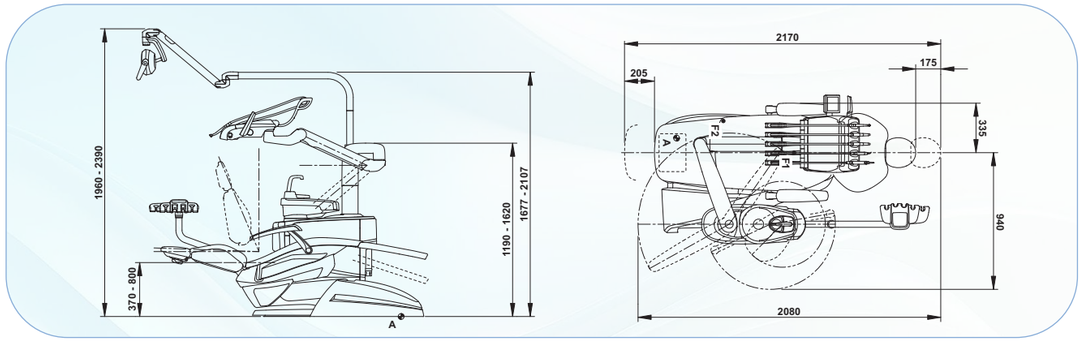

SKEMA 5 CP

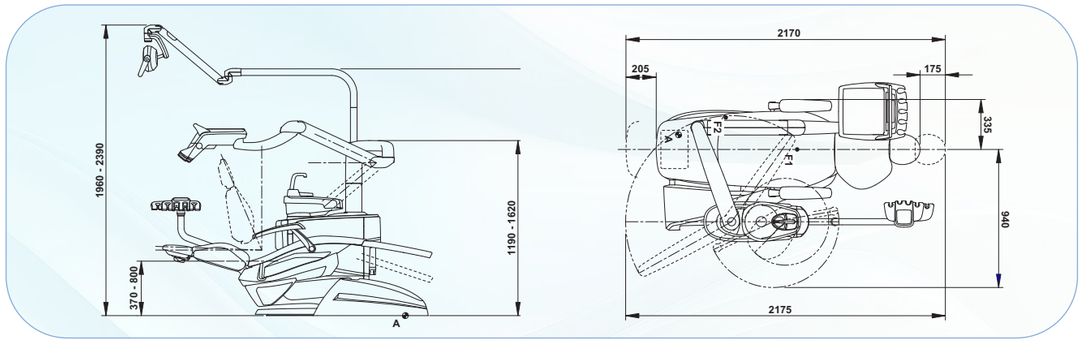

SKEMA 5 ORTHO

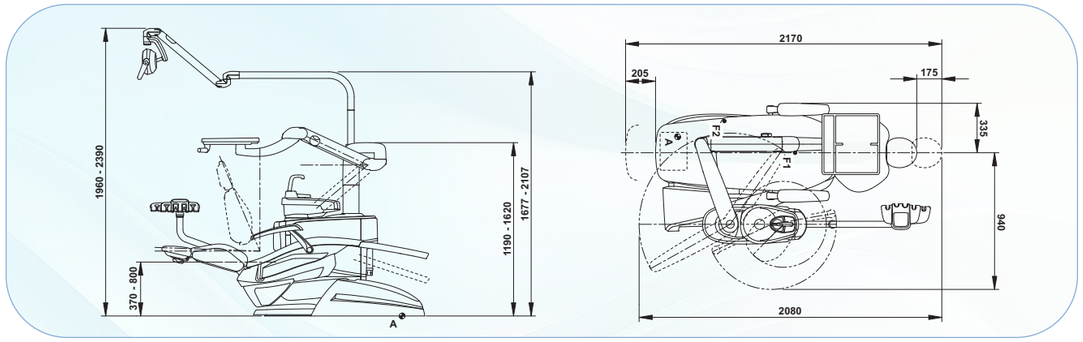

The measurements shown in the drawings are in mm.

CE 0051

STANDARD

102 Atlantic Blue
106 Mediterranean Blue
113 Pacific Blue
136 Indian Blue
132 Blueberry Violet
134 Japanese Wisteria
135 Venetian Red
115 Scottish Salmon
103 Nevada Yellow
123 Polynesian Green
101 Caribbean Green
137 Bright Silver
121 Anthracite Grey
130 Graphite Black
142 Anatolian Hazelnut
141 Papyrus Beige
143 Arabian Gold
140 Brazilian Brown
144 Ruby Red

MEMORY FOAM

198 Atlantic Blue
196 Mediterranean Blue
183 Pacific Blue
186 Indian Blue
192 Blueberry Violet
184 Japanese Wisteria
194 Venetian Red
195 Scottish Salmon
182 Nevada Yellow
193 Polynesian Green
197 Caribbean Green
187 Bright Silver
199 Anthracite Grey
180 Graphite Black
172 Anatolian Hazelnut
171 Papyrus Beige
173 Arabian Gold
170 Brazilian Brown
174 Ruby Red

SKEMA 5	Over the patient	Hanging tubes	Ortho
HYGIENE SYSTEM			
Separate Supply System	●	●	●
Autosteril A (Automatic) for disinfection of the water circuit	○	○	-
Multi Water Bio controller - MWB. (EN 1717-compliant water infeed unit with continuous disin-fection system)	○	○	○
Timed Flushing (quick water circuit flush cycle)	○	○	○
Suction Hose Disinfection (suction system wash and disinfection)	○	○	○
DENTIST'S MODULE			
Turbine kit complete with fibre optic Silent Power Evo 2L quick-coupling handpiece	●	●	-
Turbine kit complete with fibre optic Silent Power Evo 4L quick coupling handpiece	○	○	-
Turbine kit complete with fibre optic Silent Power Evo Miniature quick coupling handpiece	○	○	-
Handy Power induction micromotor Kit (100 – 40,000 RPM – 3.3 Ncm)	●	●	-
Fibre optic Handy Power LED induction micromotor kit (100 – 40,000 RPM – 3.3 Ncm)	○	○	-
Handy Power LED FLUO induction micromotor kit with FIT technology	○	○	-
Fibre optic Implantor LED induction micromotor kit (100 – 40,000 rpm – 5.3 Ncm)	○	○	-
Implantor LED FLUO induction micromotor kit with FIT technology	○	○	-
Piezosteril 6 scaler kit complete with 4 tips	○	○	-
Fibre optic Piezolight 6 scaler kit with 4 tips	○	○	-
LAEC (Integrated Apex Locator)	○	○	-
T-LED curing light kit	○	○	-
Instrument lever stop kit	○	-	-
3-way stainless steel syringe kit	●	●	-
6-way stainless steel syringe kit	○	○	-
6th instrument kit (curing light or camera handpiece)	○	○	-
INTEGRATED X-RAY SENSOR	○	○	-
Assistant's module			
T-LED curing light kit	○	○	○
3-way stainless steel syringe kit	○	○	○
6-way stainless steel syringe kit	○	○	○
Assistant's module with 4 holders and capacitive keypad mounted on self-balancing arm	●	●	●
Assistant's module with 5 holders and capacitive keypad mounted on self-balancing arm	○	○	○
Tray holder table on assistant's module	○	○	○
Operating light			
VENUS PLUS SCT COMPOSITE	●	●	●
Venus Plus MCT	○	○	○
Venus Plus MCT View	○	○	○
Unit body			
Removable and position-adjustable cuspidor bowl	●	●	●
Cup filling sensor	○	○	○
WATER-TO-CUP HEATER	○	○	-
Instrument spray heater	○	○	○
Independent cannulae selection	○	○	○
Quick coupling for air/water supply for external device	○	○	○
Tray holder table in place of bowl	○	○	○
Patient chair			
Pneumatic headrest with 3-axis movement	○	○	○
Double-jointed headrest with 2-axis movement	●	●	●
Lateral slide foot control complete with joystick	●	●	●
LATERAL SLIDE FOOT CONTROL COMPLETE WITH JOYSTICK - WIRELESS	○	○	○
Pressure-operated foot control with Joystick and spray on/off kit	○	○	○
Pressure-operated foot control with Joystick and spray on/off kit - wireless	○	○	○
Foot control, Power Pedal type	○	○	○
Power Pedal foot control - wireless	○	○	○
Patient presence sensor	○	○	○
Left armrest	○	○	○
Right armrest	○	○	○

● = supplied as standard ○ = optional - = not available

CASTELLINI
PASSION FOR DENTISTRY

Since 1935

CSK5GB1251S00 07/2025

Due to our policy of constant technological upgrading, the technical specifications may be subject to change without prior notice.
According to the standards in force, in non-EU areas the availability and specifications of some products and/or features may vary. Please contact your local distributor for further information.

cefla
Making Your Life Better.

Bu Medical Equipment
Sede Legale Ed Amministrativa
Headquarters

Cefla s.c.
Via Selice Provinciale, 23/a
40026 Imola - Bo (Italy)
tel. +39 0542 653111
fax +39 0542 653344

castellini.com

Stabilimento
Plant

Via Bicocca, 14/c - 40026
Imola - Bo (Italy)
tel. +39 0542 653441
fax +39 0542 653601