EN

CASTELLINI

TREATMENT
SKEMA 6

MAKING SPACE FOR EXCELLENCE

SKEMA 6

THE MOST ADVANCED CLINICAL FEATURES EMBEDDED

Skema 6 allows dentists to address any clinical need, even specialist disciplines, knowing that they can rely on cutting-edge technologies and exceptional ease of use. Designed for the most versatile and demanding dentists, Skema 6 features a wide range of configurations that provide maximum operating comfort.

Technology and performance for professional evolution.

SKEMA 6 CP

PERFECT POSITIONING FOR ANY STYLE

The Skema 6 CP model is the primary solution for dentists who prefer hanging-tube instruments. The new design and mobility of the module, together with the flexible ergonomics of the assistant's module, make this model adaptable and useful in every situation.

Ergonomics and design in one single solution.

SKEMA 6 CART

FREEDOM OF MOVEMENT

The Cart version offers improved freedom of movement with its slender and essential design, which ensures optimum operational comfort in any environment.
Compact design and performance anywhere.

A QUESTION OF TECHNOLOGY

In addition to its user-friendly interface, Skema 6 features a practical yet stylish control panel. While both versions feature a 7” capacitive multi-touch display, dentists are free to select either the Clinic model or the Multimedia model, which provides additional multimedia features. The technologically advanced control panel provides greater scope for the personalisation of programmes, instruments and displayed data.

FULL TOUCH INTERFACE

The Full Touch console with 7” multitouch display ensures user-friendly control of dental unit functions. What’s more, dentists can adjust instrument operating parameters by setting their own preferences and can control/monitor hygiene devices. The integrated software manages endodontic, implantology and conservative functions. Users can also display images, X-rays and video tutorials.

VOICE CONTROLS

Dentists have numerous voice-controlled functions at their disposal. This speeds up workflows and improves hygiene by letting dentists bypass physical contact with the control panel and the integrated accessories. The different instrument modes are voice-activated. It’s also possible to control the operating light and the patient chair, by selecting one of the saved positions. Users can also start the timer when performing clinical procedures such as impression-taking.

MULTIPLE CUSTOMISED SET-UPS

NFC technology makes it possible to access the dental unit - equipped with an integrated system - to save personalised preferences and settings. With up to 20 memory slots available, this is ideal for multi-user practices. This option involves using a bracelet that instantly connects to the dental unit where the dentist’s preferences (chair position, interface, light settings, cuspidor bowl and cup preferences, as well as the operating parameters of integrated instruments) were previously saved.

PROFILE MANAGEMENT

As-standard management of 4 user profiles allows them to set personalised parameters for the patient chair, cuspidor bowl and instruments, including pre-settings for implant and endodontic procedures.

DENTISTS’ PROFILES CAN BE SAVED

Dentists can customise every single setting and save them all on a memory device. These preferences can be uploaded to the dental unit in seconds via the USB port.

NFC TECHNOLOGY

Just tap the bracelet on the NFC symbol on the side of the dentist’s module to connect to the dental unit.

IMPLANT SURGERY AT YOUR FINGERTIPS

Skema 6 provides the dentist with a complete set of devices and software to perform all implant surgery tasks. Only a fully integrated implantology system allows the dentist to optimise the time spent at the patient chair and focus solely on the operation and the patient. Skema 6 is specifically designed for implantology. It is equipped with a powerful induction micromotor, a peristaltic pump and a cutting-edge control panel that makes it possible to quickly customise and save speed, torque and irrigation rate parameters.

PERISTALTIC PUMP

Integrated on the dentist's module, the pump can easily be controlled via the control panel. It irrigates the operating field with a sterile saline solution for optimal asepsis.

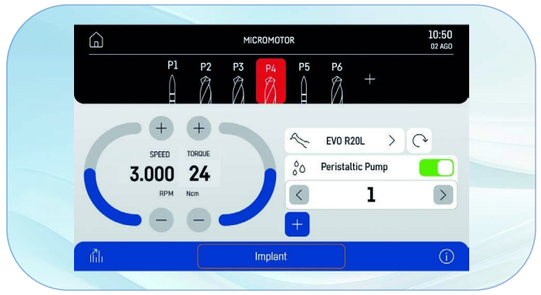

OPERATING PARAMETERS

The display shows only the information relevant to the clinical needs of the moment: all working parameters can be modified with ease at the touch of a finger, thereby leaving the dentist free to focus on the operation and the patient.

GOLDSPEED EVO R20-L CONTRA-ANGLE

Specific for surgery. Autoclavable and thermodisinfectable, it can be disassembled for thorough cleaning. With internal cooling, external spray and LED with integrated generator.

IMPLANTOR LED MICROMOTOR

Noiseless and ultra-light, the Implantor LED micromotor is vibration-free and characterised by extremely high torque. With suitable contra-angles, it can deliver up to 70 Ncm.

TORQUE CURVES

The dentist can also use an integrated function that records torque curves during surgery. Documentation will also be produced in an exportable form after the treatment session to provide a log of the delivered torque and the implant tightening torque.

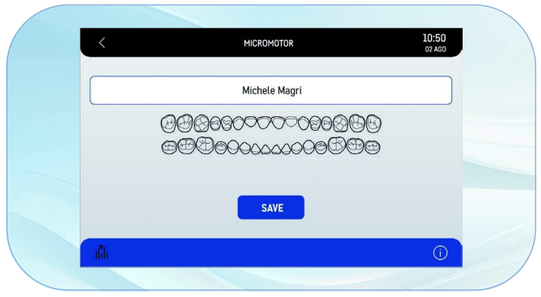

For an even clearer view during treatment, it is also possible (where an integrated camera is available) to view the curve on the monitor integrated on the dental unit: a key asset during academic and training activities.

COMPLETE SYSTEM FOR ENDODONTICS

Skema 6 features a comprehensive set of instruments, software and functions designed for endodontics and all related treatment. Dentists have access to an extensive bur database and a specific contra-angle. They can also precision-control the operating parameters that are essential to treatment. Perfect control of the specialist functions and 360° integration of the endodontic system ensure excellent workflows and positive treatment outcomes.

RECIPROCATING MODE

Together with the EVO E4 contra-angle, the control mode with alternating rotation allows for the use of RECIPROC®, RECIPROC BLUE® and WAVEONE GOLD® reciprocating files. The endodontic file brand names are not owned by Cefla or any of its subsidiaries.

DATABASE

For all traditional endodontic procedures, the control panel is able to automatically set optimum parameters thanks to an inbuilt database of the most common endocanalar files.

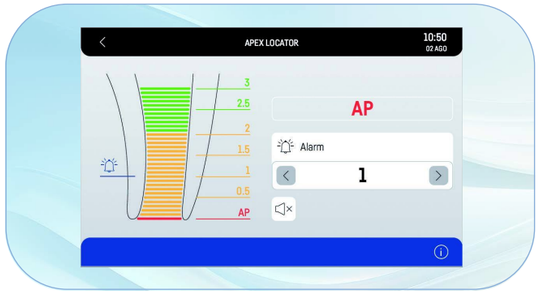

LAEC - INTEGRATED APEX LOCATOR

The device helps the dentist locate the root apex via an audio-visual indicator. Combined with the EVO E4 contra-angle, it also integrates the APEX-STOP function which automatically switches the file off upon reaching a set safety threshold.

EVO E4 CONTRA-ANGLE

Suitable for any type of endodontic treatment, the device is designed to be compatible with Castellini reciprocating mode and with the APEX-STOP function of Castellini apex locator.

EXCELLENT INSTRUMENTS

Built according to the highest technological standards and drawing on Castellini's 80 years of experience, all instruments, handpieces and accessories are designed to meet every possible dentistry need. Cutting-edge instruments improve every aspect of implant surgery, and conservative and endodontic dentistry.

IMPLANTOR LED FLUO

The new, now-quieter Implantor LED micromotor features tubes that improve handling. Moreover it's available with the optional FIT (Fluorescence-aided Identification Technique) function that lets users detect the presence of composite materials with a special LED light. This technology makes tasks in the conservative, orthodontic and aesthetic fields more precise.

Implantor LED FLUO doesn't just highlight the composite fillings, differentiating it from the natural structure of the tooth: it also highlights brackets on fixed braces and the invisible attachments used to secure transparent corrective braces.

SURGISON 2

Specifically designed for oral surgery, implantology and osteotomy, this handpiece is available with a wide range of accessories for any treatment requirements. Interchangeable with Piezolight 6 and compatible with Piezosteril 6, subject to tubing replacement, the Surgison 2 handpiece is automatically detected and piloted by the cart at all times. Completely autoclavable, it provides optional irrigation with sterile fluids for complete asepsis of the operating area.

PIEZOLIGHT 6 / PIEZOSTERIL 6

Available with LED lighting and fully autoclavable, ultrasound handpieces are suitable for prophylaxis, endodontics and periodontal procedures. Ultrasound vibrations are linear and controlled. There are no parasitic lateral vibrations. Constant control and self-adjustment of frequency according to load and the condition of the tip. Irrigation flow can be fine-adjusted via a special dial.

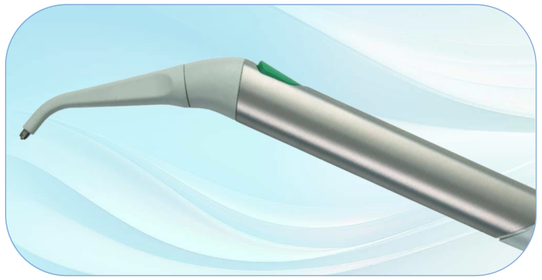

SYRINGE

Featuring a streamlined and easy-to-handle design, the syringe provides six functions. The handle and tip are autoclavable.

T-LED

T-LED has an emission spectrum for activation of the latest-generation composites. It features a swivel grip and a user-friendly interface. The bracket programme - one of the seven available - consists of 5 brief rapid-succession emissions.

SILENT POWER TURBINE AND GOLDSPEED CONTRA-ANGLES

Castellini offers a complete set of turbines and contra-angles suitable for all fields of dentistry.

OPERATING COMFORT STARTS FROM THE DESIGN

With Skema 6, Castellini offers improved ergonomics and focuses sharply on the medical staff operating around the dental unit. Every element is engineered to combine a slender design with a compact working unit. This provides a larger work area in the dental practice, better functional performance of every element, leaner workflows, and ergonomic solutions specifically designed for dental assistants.

LIGHT AND COMPACT

The dentist's module with over-the-patient delivery is light and easy to move.

- Vertical positioning can be activated and deactivated by lightly touching the capacitive sensor.
- Increased tubing reach.
- Pivoting easy-to-reach tray holder with small footprint.
- Self-balancing instruments to minimise dentist wrist fatigue.
- Optional instrument lever lock for enhanced freedom of movement.

LEVERS WITH SIDEFLEX TECHNOLOGY

Thanks to the articulated joint of the levers featuring the exclusive SideFlex technology, the instruments are light and easy on recall. The tilting joint enables lateral movements without exercising any traction on the operator's wrist. The levers can be completely disassembled and their balance and traction adjusted during position recalls.
The levers with SideFlex technology are available as an option.

ERGONOMICS IN MOVEMENTS

Designed for dentists who prefer hanging tubes, this compact and easy-to-handle module provides a wide range of comfortable positions around the operating zone. It is equipped with a 7” capacitive multi-touch display and a practical handle that makes horizontal movements easier.

DENTIST’S MODULE

Instruments are easier to grasp thanks to their layout and the difference in tilt between central instruments and outer ones. Holders have been designed to aid instrument re-positioning and maximise stability. The sixth instrument can be integrated on the side of the module. The dentist can choose between intraoral camera and curing light, but the application is not available if the Zen-X X-ray sensor is installed.

The transthoracic tray holder features a broad support surface that does not interfere with the patient. It can be positioned and moved horizontally.

OPTICAL SENSOR

Cup filling is completely automated thanks to an optical sensor, granting the patient greater autonomy. Together with the new motor-driven cuspidor bowl, this speeds up rinsing considerably.

ASSISTANT’S MODULE

The assistant’s module, fitted on a vertically-adjustable double arm, adapts to any working method and is available with 4 or 5 holders. In addition to syringe and suction cannulae, it is also possible to add a camera and a curing light or a dynamic instrument. An optional position-adjustable tray holder is also available.

CUSTOMISABLE CHAIR

The very heart of the practice, the patient chair offers plenty of scope for customisation and a selection of foot controls, with both wired and wireless versions available. Designed to maximise comfort, the patient chair can incorporate a patient presence sensor. This allows activation of stand-by mode when the patient leaves, thus limiting energy consumption. Where the Di.V.A. virtual assistant is in use, the sensor transmits statistical data to monitor effective dental unit usage. The chair also integrates an automatism that switches the operating light on/off as a function of patient presence.

COMFORT AT HAND

The design of the seat and backrest increases the patient chair comfort. The backrest features a highly resistant structure with soft padding and hard-wearing, easy-to-clean upholstery.
Chair movements are designed to avoid uncomfortable compression in the lumbar area. Castellini has designed a system to give dentists greater freedom of choice in terms of where to position the dental unit inside the surgery to match the existing connections. Depending on the floor outlets and their position, the dental unit can be installed using the connection located directly under the leg rest or the one under the front part of the unit body.

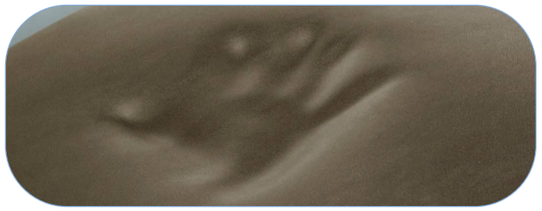

The optional Memory Foam padding adapts to patients of any build, ensuring proper anatomical support at all times. This reduces the number of pressure points on the patient's body, favouring microcirculation and ensuring greater comfort.

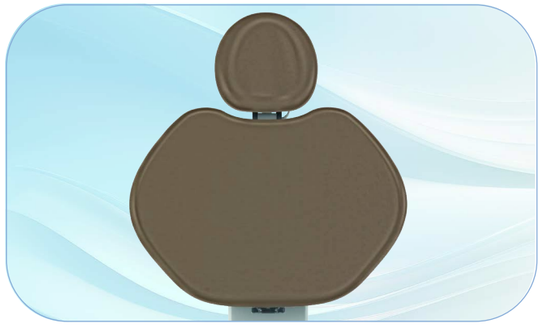

STYLISH ERGONOMICS

The shape of the backrest streamlines access to the operating zone both in frontal view and indirect vision mode.

NORDIC BACKREST

A backrest designed for those who want to offer patients sturdy arm and elbow support, allowing excellent access for dentists who work in the 12 o'clock position.

HEADREST

The exclusive pneumatic orbital headrest, which pivots on three axes and allows for a quick and precise assisted positioning, is available as an option. Movement is activated by the button on the lower side of the headrest.

FOOTREST

The adjustable footrest allows for an easy and accurate disinfection.

LATERAL SLIDE FOOT CONTROL

Lets dentists control Chip Air and Chip Water functions on the instrument in use, invert rotation of the micromotor, control patient chair movement and switch on the operating light. Wired and wireless versions available.

PRESSURE-OPERATED FOOT CONTROL

Provides the same functions as the lateral slide foot control. Both devices also provide, in surgery mode, peristaltic pump activation and programme changeover controls. Wired and wireless versions available.

POWER PEDAL FOOT CONTROL

The third foot control includes all the functions of the previous models and is characterised by two additional elements to recall two more saved working positions. Wired and wireless versions available.

INTEGRATED DIAGNOSTICS

The main advantage provided by the inbuilt X-ray unit is that it makes diagnostics faster by showing information and sharing it with the patient in real time. The inbuilt system consists of an X-ray unit with high-frequency generator and wireless remote control, plus an HD digital sensor, IP67 certified.

RXDC WITH EXTEND TECHNOLOGY

Thanks to extensive internal collimation and an extremely small focal spot, the X-ray unit provides high-quality images to ensure fast, accurate diagnosis.

The integrated Zen-X sensor, available in two sizes, is housed in the dentist's module, thus speeding up acquisition of intraoral X-ray images. In a matter of seconds, the reprocessed image is displayed on the monitor and, if the Multimedia version is installed, also on the control panel on the dentist's module.

22” LED MONITOR

The 22” LED monitor with 16:9 format ensures perfect image display and easy, comfortable interaction thanks to ergonomic design and the special IPS panel that provides a wide viewing angle. Images are managed via the new Full Touch Multimedia control panel which allows for the adjustment of image contrast levels, colours, rotation and zoom. The monitor can be integrated into the dental unit either with a single arm or a double-jointed arm for smoother interaction with the patient and greater ease of use.

COMMUNICATE WITH STYLE

Communicating with patients using cutting-edge tools and technology inspires trust. It streamlines the relationship with the patient and ensures more effective illustration of treatment outcomes. Castellini’s multimedia system consists of an inbuilt camera with HD sensor and extensive depth of field, plus a 22” monitor certified as per the EEC Medical Devices Directive.

INTEGRATED HD CAMERA

The integrated camera features streamlined design for better use inside the oral cavity, and an ergonomic handle. HD-quality images ensure perfect rendering and maximum investigation accuracy.

- Optical system with 7 glass lenses and 16:9 format HD sensor.
- Partially retroflexed 90° viewing angle.
- Depth of field from 5 to 70 mm.
- Freeze-frame activation through the touch-sensitive key.

The easy-to-attach and remove Macro Cap accessory magnifies up to 100x to deliver detailed, extremely sharp images.

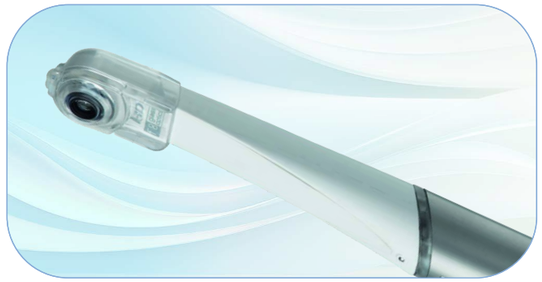

A CONNECTED SURGERY

Simply by connecting to the internet with any browser, and without having to download any software, dentists and/or practice owners can access a website that offers a comprehensive range of digital services, remote assistance, video tutorials and updated user manuals for purchased models.

VIRTUAL ASSISTANT AND REMOTE MONITORING

Di.V.A. (Digital Virtual Assistant) optimises the workflow in advanced dental practices. In addition to being viewable on a PC, Di.V.A. can be easily consulted on smartphones and tablets.

In combination with Di.V.A., users can increase the efficiency of the practice by activating the EasyCheck service: each connected dental unit can rely on real-time remote diagnosis and technical support, vital for minimizing downtimes and ensuring continuity of service.

DASHBOARD

A simple dashboard lets the dentist monitor cart activity across all functions and analyse dental practice efficiency. In larger surgeries this is an excellent tool for managing heavy workloads and planning maintenance tasks.

Where the patient sensor is present, statistical data on how the dental unit is used can be collected and processed; the information is transmitted to Di.V.A. and displayed on the dashboard.

MONITORING HYGIENE SYSTEMS

Di.V.A. logs completed disinfection cycles, building up a database that is useful for in-practice assessment. This data also helps users estimate their consumption of disinfectant products and monitor the effective reactivation of equipment.

INSTRUMENT MODE

The dashboard lets users monitor effective usage of integrated instruments such as the micromotor; this includes detailed information on the employed work modes (conservative, endodontic and implantology).

easycheck

Di.V.A. Digital Virtual Assistant

TAILORED LIGHTING

The possibility to adjust light intensity and colour temperature is essential to operate in perfect lighting conditions at any time. With the new Venus LED MCT lamp the settings are tailored according to the circumstances. The lamp rotates on three axes to ensure perfect lighting and avoid any shadow zones in the operating area. Where the virtual voice assistant is available, the operating light can be voice-controlled (on/off, mode selection).

EXCEPTIONAL BRIGHTNESS

The Venus LED MCT lamp rotates on three axes to ensure perfect lighting of the operating field whatever the task or position. Features exceptional brightness: specific values can be set to match each clinical need. The No Touch sensor can switch the lamp on/off and adjust light intensity up to 50,000 Lux. The hermetically sealed front screen is easy to clean, and the handles can be removed and sterilised in an autoclave.
The innovative system makes it possible to provide just the right light for every clinical discipline, with 3 different temperature values: warm (4,300 K), neutral (5,000 K) or cool (5,500 K) light.

COMPOSITE MODE

This feature changes the light wavelength to prevent the pre-curing of composite materials while ensuring optimum lighting of the operating field.

VENUS LED MCT - VENUS LED MCT VIEW

The Venus LED MCT View combines a 4K camera with PC software to capture ultra-high-definition images and videos. The Full Touch control panel and multimedia system let users operate the various functions (recording, zoom, image capture and Smart Focus) via user-friendly icons or optional voice-activated controls. The Smart Focus system features liquid lenses, ensuring fast, optimal digital focusing. In addition to smoothing practitioner-patient communication, the camera is also, thanks to recordings and multimedia streaming, a useful aid for clinical training, treatment documentation and academic disclosure.

WARM, NEUTRAL AND COOL COLOUR

All temperature variations, from warm to neutral or cool and vice versa, can be activated with ease, ensuring a perfect view of the operating area according to the treatment being performed at all times.

ADVANCED AND CERTIFIED SYSTEMS

Ever since its founding, Castellini has been committed to developing cutting-edge devices to guarantee aseptic conditions on the dental unit. Thanks to the close cooperation with the Department for Public Health and Infectious Diseases of the Sapienza University of Rome and the Department for Public Health and Paediatrics of the University of Turin, the hygiene systems available on Skema 6 have been greatly improved. The result: automatic, easy-to-manage devices and effective defence to provide patients and colleagues with a clinical environment that is safe at all times.

M.W.B.

Reliable and effective, the M.W.B. system, used in conjunction with Peroxy Ag+, acts against all water-borne contaminants, including Legionella. Tests carried out on a dental unit over a 3-month observation period showed that regular use of M.W.B. and daily execution of an intensive disinfection cycle with the Autosteril system ensure outstanding water hygiene quality, with bacterial loads kept to zero.

AUTOSTERIL

Skema 6 can be equipped with Autosteril, the high-standard automatic disinfection system, for all the spray water circuits. During the cycle, the instruments are stored in an inbuilt receiving area.
Used together with Peroxy Ag+, the Autosteril system ensures a mycobactericide, bactericide and anti-Legionella action, certified by the Sapienza University of Rome. Analysis has demonstrated that the disinfection provided is sufficient to “eradicate all tested microbes from the piping of the dental unit, even with higher contamination levels.”
Autosteril helps sanitisation at the end of a day’s session and allows short cycles to be performed via the following steps:

- circuit draining with compressed air;
- addition of 3% H_2O_2 to the spray water circuits;
- a liquid ‘hold time’ suitable for intensive disinfection;
- liquid expelled with compressed air;
- (mains or distilled) water flushing.

TIME FLUSHING

To drain stagnant fluid from piping after use, the Time Flushing feature carries out a complete water change with a timed flow of the feed fluid.

S.S.S. BOTTLE

The stand-alone supply system is equipped with a 1.8 litre capacity pressurised tank, easily accessible from outside to facilitate filling or replacement.

THE MOST EFFECTIVE HYGIENE SYSTEM

Thanks to the outstanding design of every single component on the Skema 6, patients and medical staff are constantly protected against risk of contamination. Only an approach that comprehensively considers all the external components of the dental unit and the work environment can effectively deal with the hygiene issue. This is what we do at Castellini.

S.H.D.

Flushing and sanitisation of the suction system with water and a special liquid take approximately 2 minutes: ideal as a between-patients cleaning procedure.

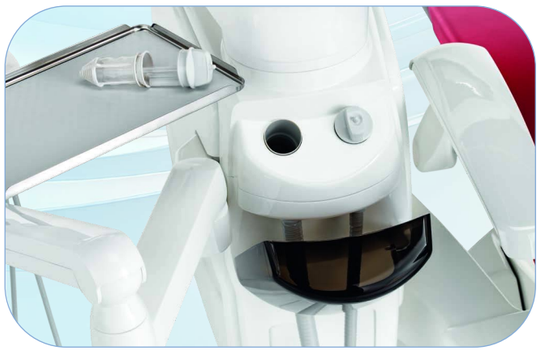

FILTERS + UNIT BODY COVER

Stylishly protected by a cover, the filters can easily be removed to facilitate emptying and cleaning tasks.

DETACHABLE INSTRUMENT TUBING

Removable and easily disinfectable, the tubes make cleaning and replacement tasks easier and faster.

REMOVABLE DENTIST'S MODULE HANDLE

Can be easily removed for maximum hygiene.

REMOVABLE LAMP HANDLES

Can easily be removed and autoclaved.

REMOVABLE INSTRUMENT LEVERS

When the optional SideFlex feature is enabled, the levers can be easily removed for improved hygienisation.

CUSPIDOR BOWL

The cup-and-bowl-fill unit can easily be removed and sterilised in an autoclave. Note that the cuspidor bowl handle is removable and autoclavable.

REMOVABLE CANNULA GUIDES

The cannula guides on the assistant's module can be removed to easily disinfect and clean the housings.

TECHNICAL SPECIFICATIONS

SKEMA 6

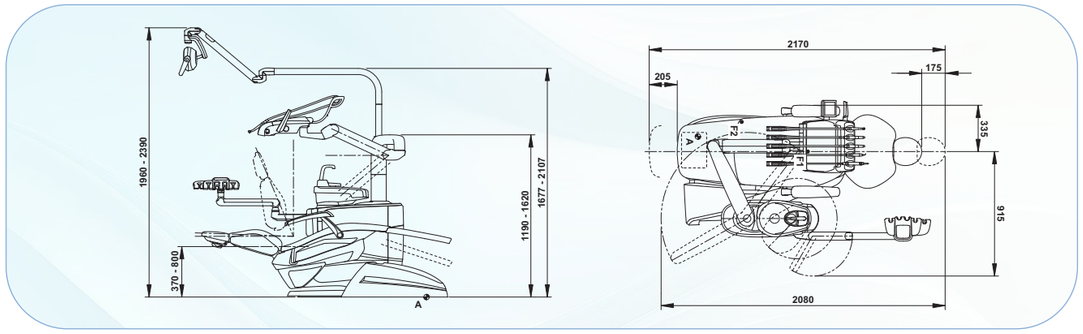

SKEMA 6 CP

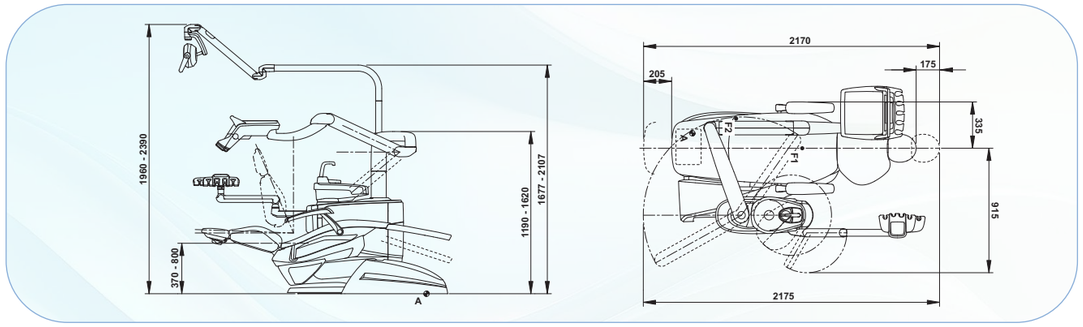

SKEMA 6 CART

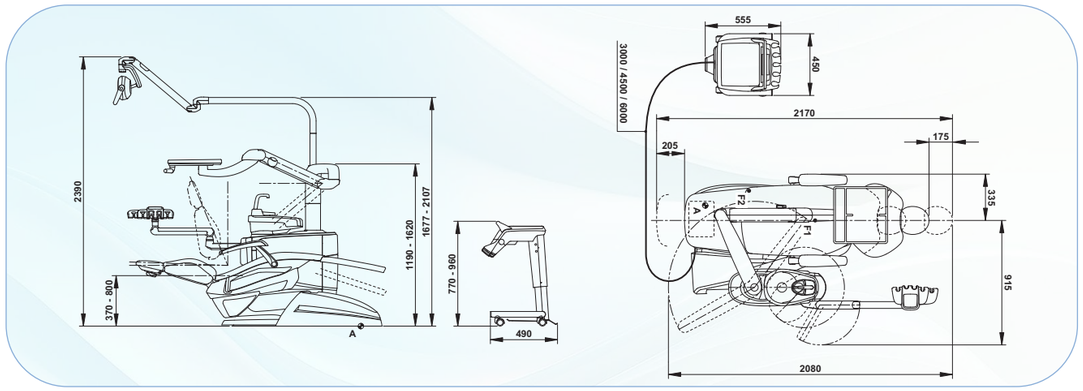

Drawing measurements are in millimetres.

CE 0051

STANDARD

102 Atlantic Blue
106 Mediterranean Blue
113 Pacific Blue
136 Indian Blue
132 Blueberry Violet
134 Japanese Wisteria
135 Venetian Red
115 Scottish Salmon
103 Nevada Yellow
123 Polynesian Green
101 Caribbean Green
137 Bright Silver
121 Anthracite Grey
130 Graphite Black
142 Anatolian Hazelnut
141 Papyrus Beige
143 Arabian Gold
140 Brazilian Brown
144 Ruby Red

MEMORY FOAM

198 Atlantic Blue
196 Mediterranean Blue
183 Pacific Blue
186 Indian Blue
192 Blueberry Violet
184 Japanese Wisteria
194 Venetian Red
195 Scottish Salmon
182 Nevada Yellow
193 Polynesian Green
197 Caribbean Green
187 Bright Silver
199 Anthracite Grey
180 Graphite Black
172 Anatolian Hazelnut
171 Papyrus Beige
173 Arabian Gold
170 Brazilian Brown
174 Ruby Red

SKEMA 6	Over the patient	Hanging tubes	CART
HYGIENE SYSTEM			
Separate Supply System	●	●	●
Autosteril A (Automatic) for disinfection of the water circuit	○	○	○
Multi Water Bio controller - MWB. (EN 1717-compliant water infeed unit with continuous disin-fection system)	○	○	○
Timed Flushing (quick water circuit flush cycle)	○	○	○
Suction Hose Disinfection (suction system wash and disinfection)	○	○	○
DENTIST'S MODULE			
Instrument lever system with SideFlex technology	○	-	-
Turbine kit complete with fibre optic Silent Power Evo 4L quick coupling handpiece	●	●	●
Turbine kit complete with fibre optic Silent Power Evo Miniature quick coupling handpiece	○	○	○
Fibre optic Implantor LED induction micromotor kit (100 – 40,000 rpm – 5.3 Ncm)	●	●	●
Implantor LED FLUO induction micromotor kit with FIT technology	○	○	○
Peristaltic pump kit with saline solution irrigation set	○	○	○
"Torque Curve" implant function	○	○	○
Piezosteril 6 scaler kit complete with 4 tips	○	○	○
Fibre optic Piezolight 6 scaler kit with 4 tips	○	○	○
Surgison 2 surgical ultrasound kit	○	○	○
LAEC (Integrated Apex Locator)	○	○	○
Module for Implantor LED motor Reciprocating Mode	○	○	○
T-LED curing light kit	○	○	○
Instrument lever stop kit	○	-	-
6-way stainless steel syringe kit	●	●	●
6th instrument kit (curing light or camera handpiece)	○	○	○
Integrated X-ray sensor	○	○	-
Integrated voice control system	○	○	○
NFC multi-operator system	○	○	○
ASSISTANT'S MODULE			
T-LED curing light kit	○	○	○
3-way stainless steel syringe kit	○	○	○
6-way stainless steel syringe kit	○	○	○
Assistant's module with 4 holders and capacitive keypad mounted on self-balancing arm	●	●	●
Assistant's module with 5 holders and capacitive keypad mounted on self-balancing arm	○	○	○
Tray holder table on assistant's module	○	○	○
OPERATING LIGHT			
Venus LED MCT lamp	●	●	●
Venus LED MCT View lamp	○	○	○
UNIT BODY			
Swivel and removable motor-driven cuspidor bowl	●	●	●
Cup filling sensor	●	●	●
Water-to-cup heater	○	○	○
Instrument spray heater	○	○	○
Independent cannulae selection	●	●	●
Tray holder table in place of bowl	○	○	○
PATIENT CHAIR			
Patient presence sensor	○	○	○
Pneumatic headrest with 3-axis movement	○	○	○
Double-jointed headrest with 2-axis movement	●	●	●
Lateral slide foot control complete with joystick	●	●	●
Lateral slide foot control complete with joystick - wireless	○	○	○
Pressure-operated foot control with Joystick and spray on/off kit	○	○	○
Pressure-operated foot control with Joystick and spray on/off kit - wireless	○	○	○
Foot control, Power Pedal type	○	○	○
Power Pedal foot control - wireless	○	○	○
Left armrest	○	○	○
Right armrest	○	○	○

● = supplied as standard ○ = optional - = not available

CASTELLINI
PASSION FOR DENTISTRY

Since 1935

CSK6GB1251S00 07/2025

Due to our policy of constant technological upgrading, the technical specifications may be subject to change without prior notice.
According to the standards in force, in non-EU areas the availability and specifications of some products and/or features may vary. Please contact your local distributor for further information.

cefla
Making Your Life Better.

Bu Medical Equipment
Sede Legale Ed Amministrativa
Headquarters

Cefla s.c.
Via Selice Provinciale, 23/a
40026 Imola - Bo (Italy)
tel. +39 0542 653111
fax +39 0542 653344

castellini.com

Stabilimento
Plant

Via Bicocca, 14/c - 40026
Imola - Bo (Italy)
tel. +39 0542 653441
fax +39 0542 653601