EN

CASTELLINI

TREATMENT
SKEMA 8

MAKING SPACE FOR EXCELLENCE

SKEMA 8

BEYOND ALL EXPECTATIONS

In keeping with the quality that has always been Castellini's hallmark, this dental unit offers across-the-board improvements. The revolutionary Skema 8 is set to 'rewrite the future' of dental practices. Delivering outstanding performance through cutting-edge technology and fully renewed design, Skema 8 aims to meet even the highest expectations.

The future, today.

SKEMA 8 CP

FIRST-CLASS DESIGN

The Skema 8 CP model was developed to meet the specific needs of dentists who prefer hanging-tubes instruments and those who work mainly in the 12 o'clock position. Each element has been designed to ensure working freedom while keeping the patient relaxed and comfortable.

Ergonomics to match the operating style.

SLIDING INNOVATION

The result of cutting-edge research, Skema 8 offers outstanding practicality. The innovative Sliding system - which combines backrest lowering with forward seat movement - leaves the work zone unaltered and ensures dentists no longer have to move accessories during treatment. More comfortable for the patient (as it involves less back compression), the Sliding system makes the Skema 8 perfect for smaller practices. With the seat displaced by 18 cm, the dentist gains that same amount of operating space in the 12 o'clock position. Soft Motion technology ensures fluid movement and eliminates all associated noise. Moreover, the Slow Mode allows activation of very fine patient chair movements. This helps users make precision adjustments during implantology sessions or while using the microscope.

ERGONOMICS AND VERSATILITY

Designed to address any dentist's requirement, this patient chair ensures maximum comfort to any type of patient. Carefully designed shapes and movements, meticulously selected materials and an in-depth understanding of medical staff-patient dynamics help make the patient chair the ergonomic centre point of the surgery.

VERSATILE INSTALLATION

Castellini has designed a system to give dentists greater freedom of choice in terms of where to position the dental unit inside the surgery to match the existing connections.

Depending on the floor outlets and their position, the dental unit can be installed using the connection located directly under the leg rest or the one under the front part of the unit body.

The adjustable footrest allows for easy, thorough disinfection.

A UNIQUE PERSONALISED EXPERIENCE

A perfect blend of style and practicality, the backrest combines unprecedented comfort with the very best technological solutions. Built with a strong framework and soft padding, it features tough, easy-to-clean upholstery.

SMART SHAPING

The shape of the backrest streamlines access to the operating zone both in frontal view and indirect vision mode.

Surgical padding reduces the pressure points on the patient's body, favouring microcirculation and ensuring greater comfort.

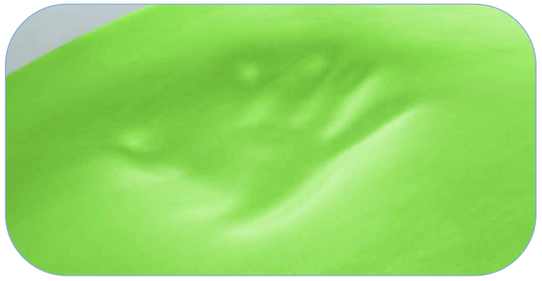

COMFORT AND SUSTAINABILITY

The chair incorporates a patient presence sensor. Users can apply settings that switch the dental unit to stand-by mode after the patient leaves, reducing energy consumption. Where the Di.V.A. virtual assistant is in use, the sensor transmits statistical data to monitor effective dental unit usage over the period of interest. The chair also includes a convenient automatism that switches the operating light on/off as a function of patient presence.

The backrest features an exclusive pneumatic orbital headrest that pivots on three axes and allows for quick, precise assisted positioning. Movement is activated by the button on the lower side of the headrest.

NORDIC BACKREST

A backrest designed for those who want to offer patients sturdy arm and elbow support, allowing excellent access for dentists who work in the 12 o'clock position.

LATERAL SLIDE FOOT CONTROL

Lets dentists control Chip Air and Chip Water functions on the instrument in use, invert rotation of the micromotor, control patient chair movement and switch on the operating light. Wired and wireless versions available.

PRESSURE-OPERATED FOOT CONTROL

Provides the same functions as the lateral slide foot control. Both devices also provide, in surgery mode, peristaltic pump activation and programme changeover controls. Wired and wireless versions available.

POWER PEDAL FOOT CONTROL

The third foot control includes all the functions of the previous models and is characterised by two additional elements to recall two more saved working positions. Wired and wireless versions available.

CUTTING-EDGE TECHNOLOGY

Technology is racing towards new frontiers. Castellini makes the best of every new development to give dentists a next-gen interface that provides ever-better performance and user-friendliness. Moreover, Skema 8 combines NFC technology with a wearable accessory, allowing dentists to work seamlessly with the dental unit.

FULL TOUCH INTERFACE

The Full Touch console with 7” multitouch display ensures user-friendly control of dental unit functions. What’s more, dentists can adjust instrument operating parameters by setting their own preferences and can control/monitor hygiene devices. The integrated software manages endodontic, implantology and conservative functions. Users can also display images, X-rays and video tutorials.

VOICE CONTROLS

Dentists have numerous voice-controlled functions at their disposal. This speeds up workflows and improves hygiene by letting dentists bypass physical contact with the control panel and the integrated accessories. The different instrument modes are voice-activated.

It’s also possible to control the operating light and the patient chair, by selecting one of the saved positions. Users can also start the timer when performing clinical procedures such as impression-taking.

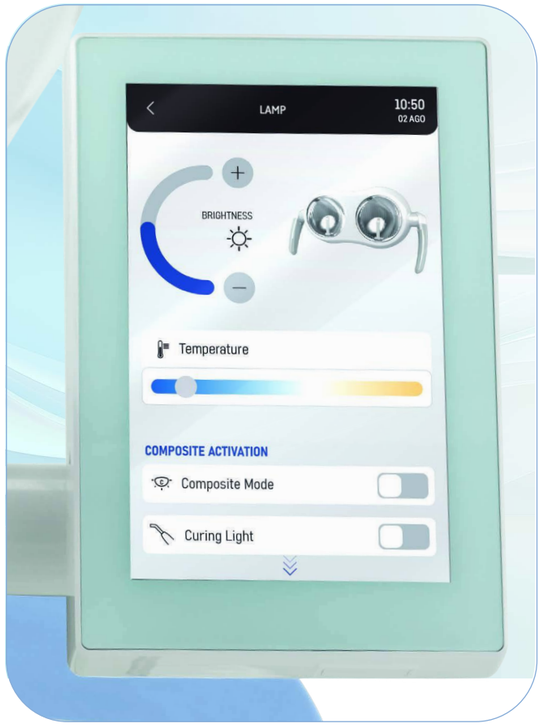

MULTIPLE CUSTOMISED SET-UPS

NFC technology makes it possible to access the dental unit - equipped with an integrated system - to save personalised preferences and settings. With up to 20 memory slots available, this is ideal for multi-user practices. This option involves using a bracelet that instantly connects to the dental unit where the dentist’s preferences (chair position, interface, light settings, cuspidor bowl and cup preferences, as well as the operating parameters of integrated instruments) were previously saved.

PROFILE MANAGEMENT

As-standard management of 4 user profiles allows them to set personalised parameters for the patient chair, cuspidor bowl and instruments, including pre-settings for implant and endodontic procedures.

NFC TECHNOLOGY

Just tap the bracelet on the NFC symbol on the side of the dentist’s module to connect to the dental unit.

DENTISTS’ PROFILES CAN BE SAVED

Dentists can customise every single setting and save them all on a memory device. These preferences can be uploaded to the dental unit in seconds via the USB port.

A NEW ERA OF DESIGN

The radically innovative Skema 8 features eye-catching design and is shaped to deliver exceptional compactness. Everything has been designed to boost the functionality of each element: its clean, essential lines - combined with state-of-the-art technology - deliver nothing less than a revolutionary step forwards.

LIGHT&EASY MODULE

The dentist's module with over-the-patient delivery is light and easy to move.

- Vertical positioning can be activated and deactivated by lightly touching the capacitive sensor.
- Increased tubing reach.
- Large, easy-to-reach transthoracic tray holder.
- Self-balancing instruments to minimise dentist wrist fatigue.
- Optional instrument lever lock for enhanced freedom of movement.

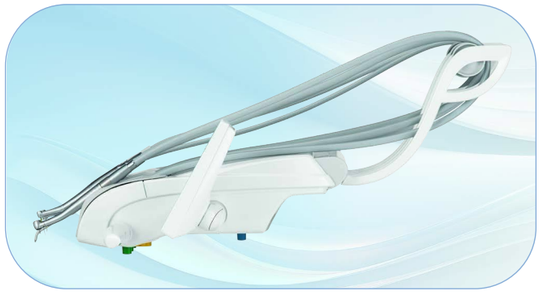

LEVERS WITH SIDEFLEX TECHNOLOGY

The instrument levers are compact yet provide extensive excursion and fine-tuned balance. Optimised with exclusive "SideFlex" technology, they also follow lateral tubing movements thanks to the presence of a swing joint. The levers also ensure precision recovery, thus preventing wrist fatigue, and are completely removable.

COMPACT TRAY HOLDER

The new compact version of the tray holder features essential design and broadens the operator's freedom of movement.

BALANCED INSTRUMENTS

Thanks to the articulated joint of the levers, instruments are light and easy on recall. Balance and traction can be adjusted during positions recalls.

THE CONVENIENCE OF VERSATILE ERGONOMICS

Designed for dentists who use hanging tubes, this compact module offers plenty of scope for positioning around the work area. A large handle smooths horizontal movement. The practical instrument layout and the shaping of the individual holders help prevent any accidental instrument drops during repositioning. Workflows are also streamlined by differences between the tilt angles of the inner and outer instruments.

EVERYTHING UNDER CONTROL

Central positioning on the front of the module makes the 7” Full Touch display easily accessible to the dentist. Smaller overall module dimensions have been combined with optimised operating spaces.
A button on the display activates the pneumatic release to allow height adjustment of instrument positioning.

The innovative control panel allows simple, practical management of instruments, patient chair and integrated systems and assists the dentist in every clinical specialisation, from conservative dentistry to oral surgery.

TRANSTHORACIC TRAY HOLDER

The transthoracic tray holder features a broad support surface that does not interfere with the patient. It can be positioned and moved horizontally.

SIXTH INSTRUMENT

The sixth instrument module can be mounted on the side of the dentist’s module. The dentist can choose between intraoral camera and curing light, but the application is not available if the Zen-X X-ray sensor is installed.

THE AESTHETICS OF PERFORMANCE

All technical and aesthetic features on the Skema 8 have been designed and built with the utmost care. From the innovative carbon look to the quality of the materials and the construction, every aspect of the dental unit has been developed to create a comfortable, practical, technology-rich environment: a modern practice where dentists can make the most of their hard-won skills.

ASSISTANT'S MODULE

The assistant's module, fitted on a vertically-adjustable double arm, adapts to any working method and is available with 4 or 5 holders.

CUP SENSOR AND MOTOR-DRIVEN CUSPIDOR BOWL

Cup filling is now fully automated and gives the patient greater autonomy. Together with the new motor-driven cuspidor bowl, this speeds up rinsing considerably.

PERFECTLY INTEGRATED IMPLANTOLOGY

Featuring a fully integrated implantology system, Skema 8 streamlines all implant surgery tasks and operating protocols. This makes it easier for dentists to perform implant treatment, letting them focus exclusively on the procedure and the patient. The implantology configuration makes use of a powerful Implantor LED induction micromotor, a peristaltic pump incorporated on the module, and an advanced control panel that makes it possible to quickly customise and save pump speed, torque and delivery rate parameters.

Shock- and water-resistant, the 7” capacitive multitouch screen is compatible with multimedia content. The user interface can be personalised. Different operator profiles can be saved on the same dental unit, and the relative customised settings saved on a USB stick.

GOLDSPEED EVO R20-L CONTRA-ANGLE

Specific for surgery. Autoclavable and thermodisinfectable, it can be disassembled for thorough cleaning. With internal cooling, external spray and LED with integrated generator.

IMPLANTOR LED MICROMOTOR

Noiseless and ultra-light, the Implantor LED micromotor is vibration-free and characterised by extremely high torque. With suitable contra-angles, it can deliver up to 70 Ncm.

TORQUE CURVES

The dentist can also use an integrated function that records torque curves during surgery.

Documentation will also be produced in an exportable form after the treatment session to keep track of the torque delivered and the tightening torque of the implant. For an even clearer view during treatment, it is also possible (where an integrated camera is available) to view the curve on the monitor integrated on the dental unit: a key asset during academic and training activities.

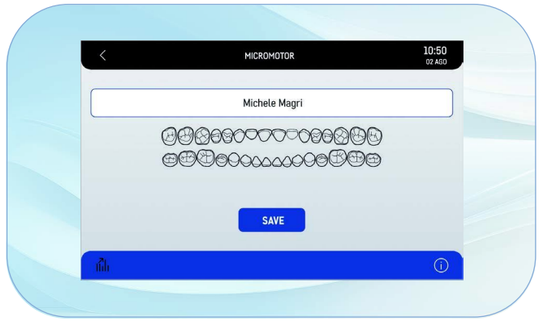

PRECISION ENDODONTICS, ALWAYS

With Skema 8, all endodontic tasks and correlated treatments are assisted to ensure dentists receive valuable help. Safe, precision control of the endocanular bur, an integrated bur database and perfect control of specialised functions make the Skema 8 an indispensable endodontics tool. What's more, the dental unit gives the dentist control of all the most sophisticated control parameters such as Autostop, Autoreverse and Autoforward. Now with an even more user-friendly interface, the innovative control panel provides exceptional performance and supplies dentists with valuable information on a wide range of clinical functions.

RECIPROCATING MODE

Together with the EVO E4 contra-angle, the control mode with alternating rotation allows for the use of RECIPROC®, RECIPROC BLUE® and WAVEONE GOLD® reciprocating files. The endodontic file brand names are not owned by Cefla or any of its subsidiaries.

DATABASE

For all traditional endodontic procedures, the control panel is able to automatically set optimum parameters thanks to an inbuilt database of the most common endocanalar files.

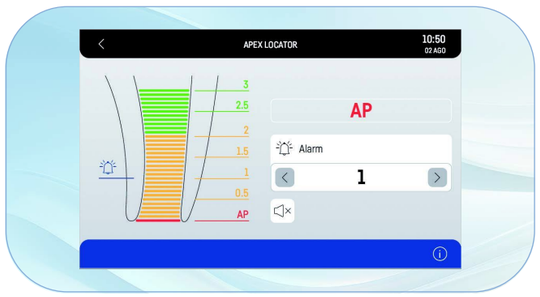

LAEC - INTEGRATED APEX LOCATOR

The device helps the dentist locate the root apex via an audio-visual indicator. Combined with the EVO E4 contra-angle, it also integrates the APEX-STOP function which automatically switches the file off upon reaching a set safety threshold.

EVO E4 CONTRA-ANGLE

Suitable for any type of endodontic treatment, the device is designed to be compatible with Castellini reciprocating mode and with the APEX-STOP function of Castellini apex locator.

CUTTING-EDGE INSTRUMENTS

Built according to the highest technological standards and by drawing on Castellini's 80 years of experience, all instruments, handpieces and accessories are designed to meet every possible dentistry need. Cutting-edge instruments improve every aspect of implant surgery, and conservative and endodontic dentistry.

IMPLANTOR LED FLUO

The new, now-quieter Implantor LED micromotor features tubes that improve handling. Moreover it's available with the optional FIT (Fluorescence-aided Identification Technique) function that lets users detect the presence of composite materials with a special LED light. This technology makes tasks in the conservative, orthodontic and aesthetic fields more precise.

Implantor LED FLUO doesn't just highlight the composite fillings, differentiating it from the natural structure of the tooth: it also highlights brackets on fixed braces and the invisible attachments used to secure transparent corrective braces.

GOLDSPEED EVO CONTRA-ANGLES

Castellini provides a complete set of contra-angles for every dental field; implantology, endodontics and the various areas of conservation.

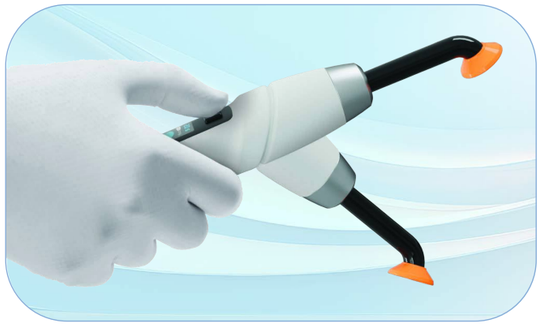

T-LED

T-LED has an emission spectrum for activation of the latest-generation composites. It features a swivel grip and a user-friendly interface. The bracket programme - one of the seven available - consists of 5 brief rapid-succession emissions.

SILENT POWER EVO TURBINES

Castellini offers a complete set of turbines; dentists can choose between standard and miniature heads according to preference.

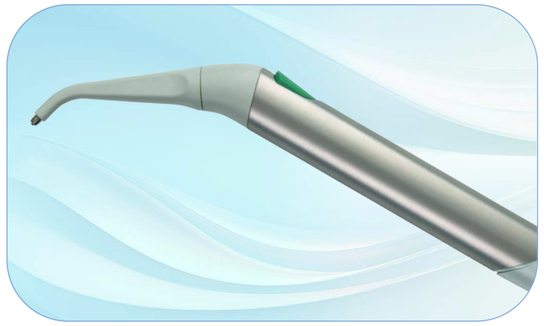

SYRINGE

Featuring a streamlined and easy-to-handle design, the syringe provides six functions. The handle and tip are autoclavable.

OUTSTANDING SPECIALIST PERFORMANCE

Castellini provides dentists with a selection of ultrasound devices for a range of tasks, from hygiene and scaling to implantology and maxillofacial surgery. Precise, reliable, light and easy to handle, they are integrated seamlessly with the Skema 8 software and electronics.

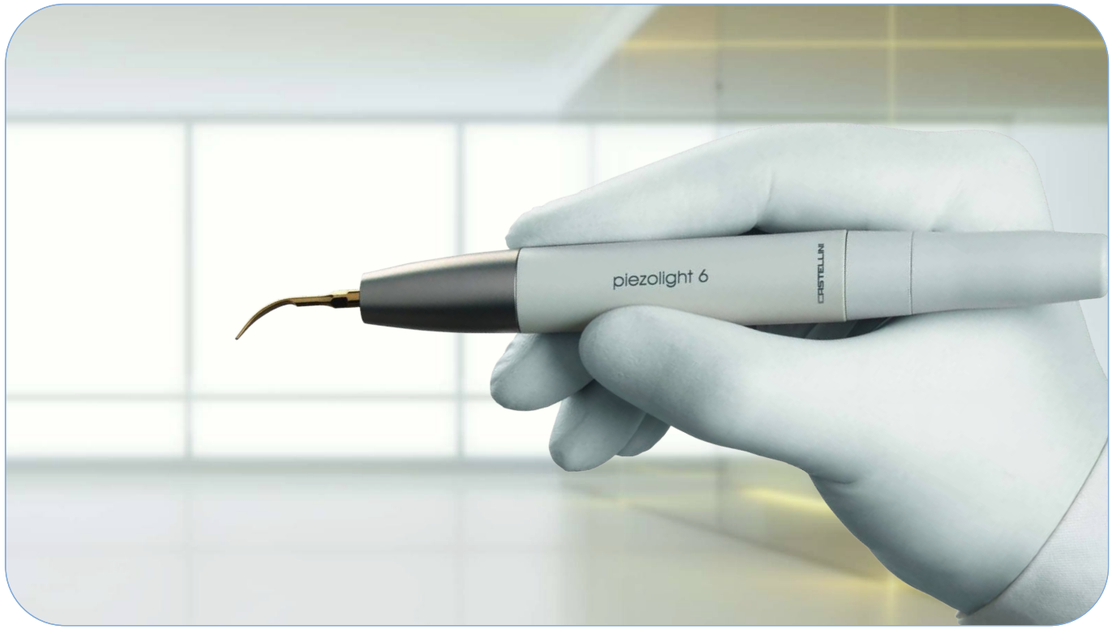

PIEZOLIGHT 6 / PIEZOSTERIL 6

Available with LED lighting and fully autoclavable, ultrasound handpieces are suitable for prophylaxis, endodontics and periodontal procedures. Ultrasound vibrations are linear and controlled. There are no parasitic lateral vibrations. Constant control and self-adjustment of frequency according to load and the condition of the tip. Irrigation flow can be fine-adjusted via a special dial.

SURGISON 2

Specifically designed for oral surgery, implantology and osteotomy, this handpiece is available with a wide range of accessories for any treatment requirements. Interchangeable with Piezolight 6 and compatible with Piezosteril 6, subject to tubing replacement, the Surgison 2 handpiece is automatically detected and piloted by the cart at all times. Completely autoclavable, it provides optional irrigation with sterile fluids for complete asepsis of the operating area.

The easy-to-understand interface makes it simple to set the correct mode according to the treatment to be performed.

STERILE IRRIGATION

The Surgison handpiece is fed with sterile liquid thanks to the perfectly integrated peristaltic pump that synchronises with use of the instrument.

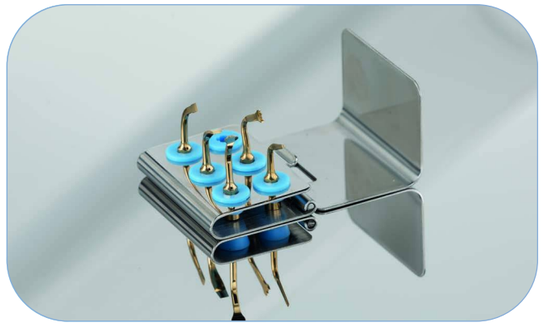

SET OF TIPS

The handpiece is supplied with an extensive set of tips so that users can perform the most traditional surgical tasks, from corticotomy to sinus lift. Practical autoclavable support.

PERFECT LIGHTING AT ALL TIMES

A good view and, therefore, quality of light, are essential, as dentists must always be able to operate under perfect artificial lighting conditions. Skema 8 features the new Venus LED MCT, an operating light with outstanding performance. This lamp has a long-lasting, low-consumption LED source, features three-axes rotation and provides users with plenty of scope to adjust the light. Where the virtual voice assistant is available, the operating light can be voice-controlled (on/off, mode selection).

VENUS LED MCT - VENUS LED MCT VIEW EXCEPTIONAL BRIGHTNESS

The Venus LED MCT lamp rotates on three axes to ensure perfect lighting of the operating field whatever the task or position. Features exceptional brightness: specific values can be set to match each clinical need.

The No Touch sensor can switch the lamp on/off and adjust light intensity up to 50,000 Lux.
The hermetically sealed front screen is easy to clean, and the handles can be removed and sterilised in an autoclave.
The Venus LED MCT View combines a 4K camera with PC software to capture ultra-high-definition images and videos. The Full Touch control panel and multimedia system let users operate the various functions (recording, zoom, image capture and Smart Focus) via user-friendly icons or optional voice-activated controls. The Smart Focus system features liquid lenses, ensuring fast, optimal digital focusing. In addition to smoothing practitioner-patient communication, the camera is also, thanks to recordings and multimedia streaming, a useful aid for clinical training, treatment documentation and academic disclosure.

TEMPERATURE ADJUSTMENT

The innovative system makes it possible to provide just the right light for every clinical discipline, with 3 different temperature values: warm, neutral and cool light.

CRI VALUE

Absolute colour fidelity thanks to a rendering that scores more than 95 on the Colour Rendering Index (CRI, scale 0-100).

VIRTUAL VOICE ASSISTANT

The new optional voice controls let users interact with the light quickly and aseptically.

COMPOSITE MODE

This feature changes the light wavelength to prevent the pre-curing of composite materials while ensuring optimum lighting of the operating field.

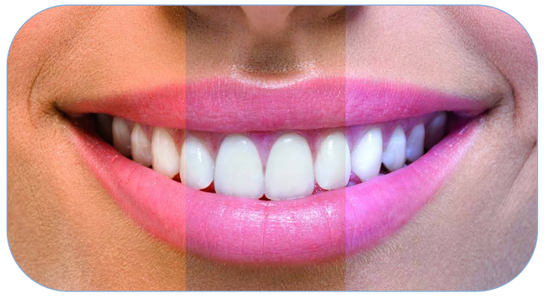

WARM, NEUTRAL AND COOL COLOUR

All temperature variations, from warm (4,300 K) to neutral (5,000 K) or cool (5,500 K) and vice versa, can easily be activated and always ensure a perfect view of the operating area according to the treatment being performed.

SAFE CERTIFIED HYGIENE

Close collaboration with major university research centres has been a cornerstone of Castellini since its founding. Providing patients with a perfectly safe clinical environment is one of the dentist's most delicate and important tasks.
It thus follows that efficient, easy-to-use hygiene systems streamline and optimise workflows in the practice.

M.W.B.

Reliable and effective, the M.W.B. system, used in conjunction with Peroxy Ag+, acts against all water-borne contaminants, including Legionella. Tests carried out on a dental unit over a 3-month observation period showed that regular use of M.W.B. and daily execution of an intensive disinfection cycle with the Autosteril system, ensure outstanding water hygiene quality, with bacterial loads kept to zero.

DVGW
CERT
Anschlusssicher
W 540

AUTOSTERIL

The Skema 8 dental unit features a high-quality automatic system that disinfects all the spray water circuits. It is also equipped with an integrated instrument collection tank, which makes it easier to position the instruments and run the cycle. Used together with Peroxy Ag+, the Autosteril system ensures a mycobactericide, bactericide and anti-Legionella action, certified by the Sapienza University of Rome. Autosteril helps sanitisation at the end of a day's session and allows short cycles to be performed via the following steps:

- circuit draining with compressed air;
- addition of 3% H_2O_2 to the spray water circuits;
- a liquid 'hold time' suitable for intensive disinfection;
- liquid expelled with compressed air;
- (mains or distilled) water flushing.

An analysis of the effectiveness of the Autosteril system conducted by the Sapienza University of Rome has highlighted that the disinfection action is sufficient to "eradicate all tested microbes from the dental unit ducts, even with high contamination levels."

TIME FLUSHING

To drain stagnant fluid from piping after use, the Time Flushing feature carries out a complete water change with a timed flow of the feed fluid.

S.S.S. BOTTLE

The stand-alone supply system is equipped with a 1.8 litre capacity pressurised tank, easily accessible from outside to facilitate filling or replacement.

ABSOLUTE PROTECTION

To maintain outstanding levels of hygiene on the external parts of the dental unit and in the workplace as a whole, Castellini has developed an advanced passive protection concept. Meticulous design of every single element on the Skema 8 ensures that patients and staff are constantly protected from risk of contamination.

S.H.D.

Flushing and sanitisation of the suction system with water and a special liquid take approximately 2 minutes: ideal as a between-patients cleaning procedure.

DETACHABLE INSTRUMENT TUBING

Removable and easily disinfectable, the tubes make cleaning and replacement tasks easier and faster.

REMOVABLE DENTIST'S MODULE HANDLE

Can be easily removed for maximum hygiene.

REMOVABLE LAMP HANDLES

Can easily be removed and autoclaved.

GLASS DISPLAY FILM

Disposable film to protect Full Touch control panel.

CUSPIDOR BOWL

The cup-and-bowl-fill unit can easily be removed and sterilised in an autoclave. Note that the cuspidor bowl handle is removable and autoclavable.

FILTERS + UNIT BODY COVER

Stylishly protected by a cover, the filters can easily be removed to facilitate emptying and cleaning tasks.

A CONNECTED SURGERY

Simply by connecting to the internet with any browser, and without having to download any software, dentists and/or practice owners can access a website that offers a comprehensive range of digital services, remote assistance, video tutorials and updated user manuals for purchased models.

VIRTUAL ASSISTANT AND REMOTE MONITORING

Di.V.A. (Digital Virtual Assistant) optimises the workflow in advanced dental practices. In addition to being viewable on a PC, Di.V.A. can be easily consulted on smartphones and tablets.

In combination with Di.V.A., users can increase the efficiency of the practice by activating the EasyCheck service: each connected dental unit can rely on real-time remote diagnosis and technical support, vital for minimizing downtimes and ensuring continuity of service.

DASHBOARD

A simple dashboard lets the dentist monitor cart activity across all functions and analyse dental practice efficiency. In larger surgeries this is an excellent tool for managing heavy workloads and planning maintenance tasks.

Where the patient sensor is present, statistical data on how the dental unit is used can be collected and processed; the information is transmitted to Di.V.A. and displayed on the dashboard.

MONITORING HYGIENE SYSTEMS

Di.V.A. logs completed disinfection cycles, building up a database that is useful for in-practice assessment. This data also helps users estimate their consumption of disinfectant products and monitor the effective reactivation of equipment.

INSTRUMENT MODE

The dashboard lets users monitor effective usage of integrated instruments such as the micromotor; this includes detailed information on the employed work modes (conservative, endodontic and implantology).

easycheck

Di.V.A.
Digital
Virtual
Assistant

22” LED MONITOR

The 22” LED monitor with 16:9 format ensures perfect image display and easy, comfortable interaction thanks to ergonomic design and the special IPS panel that provides a wide viewing angle. Images are managed via the new Full Touch Multimedia control panel which allows for the adjustment of image contrast levels, colours, rotation and zoom. The monitor can be integrated into the dental unit either with a single arm or a double-jointed arm for smoother interaction with the patient and greater ease of use.

EXCELLENT MULTIMEDIA COMMUNICATION

The result of cutting-edge, efficient, reliable technology, Castellini’s multimedia system consists of an in-built camera with an HD sensor and 90° viewing angle, plus a 22” monitor. Excellent multimedia communication simplifies the dentist-patient relationship and allows for more effective, better-informed illustration of treatment outcomes.

INTEGRATED HD CAMERA

The integrated camera features streamlined design for better use inside the oral cavity, and an ergonomic handle. HD-quality images ensure perfect rendering and maximum investigation accuracy.

- Optical system with 7 glass lenses and 16:9 format HD sensor.
- Partially retroflexed 90° viewing angle.
- Depth of field from 5 to 70 mm.
- Freeze-frame activation through the touch-sensitive key.

The easy-to-attach and remove Macro Cap accessory magnifies up to 100x to deliver detailed, extremely sharp images.

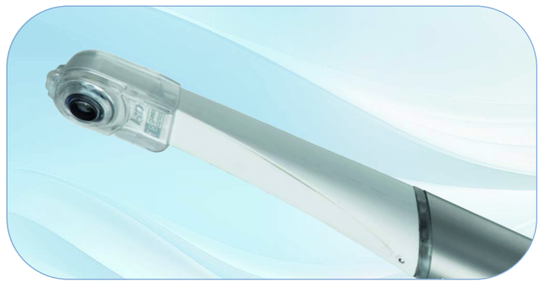

CASTELLINI DIAGNOSTICS

The integrated X-ray unit meets all diagnostic needs, providing improved ergonomics and a greater degree of patient involvement.

RXDC WITH EXTEND TECHNOLOGY

Thanks to extensive internal collimation and an extremely small focal spot, the X-ray unit provides high-quality images to ensure fast, accurate diagnosis.

The integrated Zen-X sensor, available in two sizes, is housed in the dentist's module, thus speeding up acquisition of intraoral X-ray images. In a matter of seconds, the reprocessed image is displayed on both monitor and control panel.

TECHNICAL SPECIFICATIONS

SKEMA 8

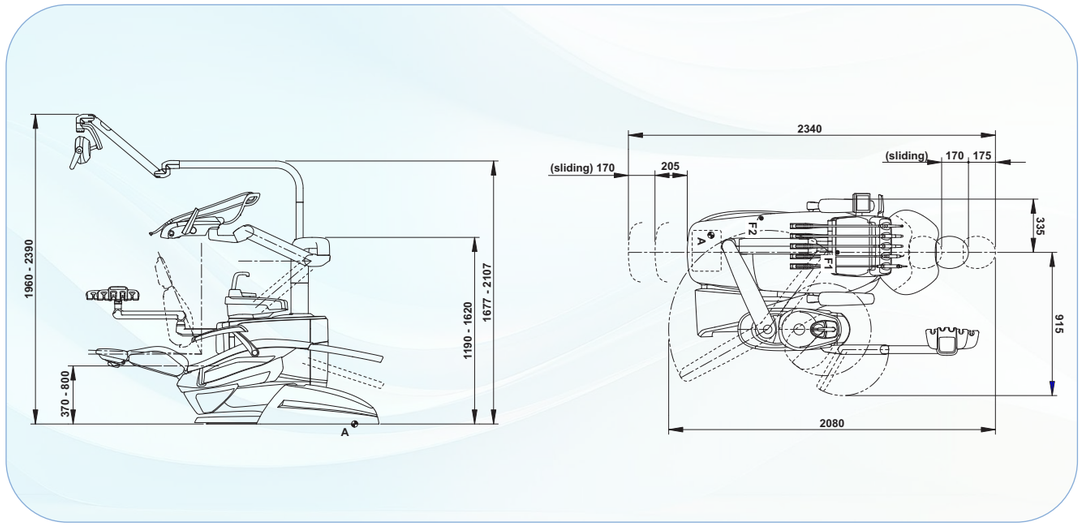

SKEMA 8 CP

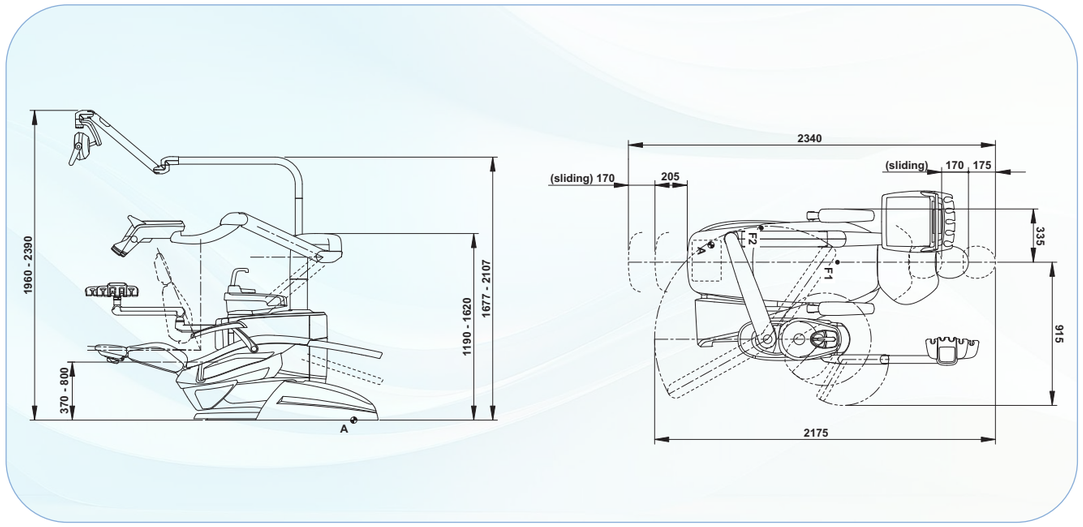

Drawing measurements are in millimetres.

CE 0051

STANDARD

102 Atlantic Blue
106 Mediterranean Blue
113 Pacific Blue
136 Indian Blue
132 Blueberry Violet
134 Japanese Wisteria
135 Venetian Red
115 Scottish Salmon
103 Nevada Yellow
123 Polynesian Green
101 Caribbean Green
137 Bright Silver
121 Anthracite Grey
130 Graphite Black
142 Anatolian Hazelnut
141 Papyrus Beige
143 Arabian Gold
140 Brazilian Brown
144 Ruby Red

MEMORY FOAM

198 Atlantic Blue
196 Mediterranean Blue
183 Pacific Blue
186 Indian Blue
192 Blueberry Violet
184 Japanese Wisteria
194 Venetian Red
195 Scottish Salmon
182 Nevada Yellow
193 Polynesian Green
197 Caribbean Green
187 Bright Silver
199 Anthracite Grey
180 Graphite Black
172 Anatolian Hazelnut
171 Papyrus Beige
173 Arabian Gold
170 Brazilian Brown
174 Ruby Red

SKEMA 8	Over the patient	Hanging tubes
HYGIENE SYSTEM		
Separate Supply System	●	●
Autosteril A (Automatic) for disinfection of the water circuit	○	○
Multi Water Bio controller - MWB. (EN 1717-compliant water infeed unit with continuous disinfection system)	○	○
Timed Flushing (quick water circuit flush cycle)	○	○
Suction Hose Disinfection (suction system wash and disinfection)	○	○
DENTIST'S MODULE		
Instrument lever system with SideFlex technology	●	-
Turbine kit complete with fibre optic Silent Power Evo 4L quick coupling handpiece	●	●
Turbine kit complete with fibre optic Silent Power Evo Miniature quick coupling handpiece	○	○
Fibre optic Implantor LED induction kit (100 – 40,000 RPM – 5.3 Ncm)	●	●
Implantor LED FLUO induction micromotor kit with FIT technology	○	○
Peristaltic pump kit with saline solution irrigation set	○	○
"Torque Curve" implant function	○	○
Piezosteril 6 scaler kit complete with 4 tips	○	○
Fibre optic Piezolight 6 scaler kit with 4 tips	○	○
Surgison 2 surgical ultrasound kit	○	○
LAEC (Integrated Apex Locator)	○	○
Module for Implantor LED motor Reciprocating Mode	○	○
T-LED curing light kit	○	○
Instrument lever stop kit	○	-
6-way stainless steel syringe kit	●	●
6th instrument kit (curing light or camera handpiece)	○	○
Integrated X-ray sensor	○	○
Integrated voice control system	○	○
NFC multi-operator system	●	●
ASSISTANT'S MODULE		
T-LED curing light kit	○	○
3-way stainless steel syringe kit	○	○
6-way stainless steel syringe kit	○	○
Assistant's module with 4 holders and capacitive keypad mounted on self-balancing arm	●	●
Assistant's module with 5 holders and capacitive keypad mounted on self-balancing arm	○	○
Tray holder table on assistant's module	○	○
OPERATING LIGHT		
Venus LED MCT lamp	●	●
Venus LED MCT View lamp	○	○
UNIT BODY		
Swivel and removable motor-driven cuspidor bowl, plus filling sensor	●	●
Water-to-cup heater	○	○
Instrument spray heater	○	○
Independent cannulae selection	●	●
Tray holder table in place of bowl	○	○
PATIENT CHAIR		
Soft-Motion movements and Sliding function	●	●
Patient presence sensor	●	●
Pneumatic headrest with 3-axis movement	●	●
Lateral slide foot control complete with joystick	●	●
Lateral slide foot control complete with joystick - wireless	○	○
Pressure-operated foot control with Joystick and spray on/off kit	○	○
Pressure-operated foot control with Joystick and spray on/off kit - wireless	○	○
Foot control, Power Pedal type	○	○
Power Pedal foot control - wireless	○	○
Left armrest	○	○
Right armrest	○	○

● = supplied as standard ○ = optional - = not available

CASTELLINI
PASSION FOR DENTISTRY

Since 1935

CSK8GB1251S00 07/2025

Due to our policy of constant technological upgrading, the technical specifications may be subject to change without prior notice.
According to the standards in force, in non-EU areas the availability and specifications of some products and/or features may vary. Please contact your local distributor for further information.

cefla
Making Your Life Better.

Bu Medical Equipment
Sede Legale Ed Amministrativa
Headquarters

Cefla s.c.
Via Selice Provinciale, 23/a
40026 Imola - Bo (Italy)
tel. +39 0542 653111
fax +39 0542 653344

castellini.com

Stabilimento
Plant

Via Bicocca, 14/c - 40026
Imola - Bo (Italy)
tel. +39 0542 653441
fax +39 0542 653601