DENTAL UNITS



ENGLISH

PLANMECA

Planmeca dental units – created for better patient care 4

Easy access, comfortable consultation 6

Ideal ergonomics 8

Relaxed patient 10

Designed to last 12

It's all in the details 14

Stand out with colour 16

Infection control is a top priority 18

Optimised equipment usage with Planmeca Insights™ 20

Planmeca Pro dental unit line 22

Planmeca Pro50™ 24

Planmeca Pro50™ S 26

Planmeca Pro40™ 28

Planmeca Pro50™ Chair 30

Planmeca Compact dental unit line 32

Planmeca Compact™ i5 34

Planmeca Compact™ i Classic 36

Planmeca Compact™ i3 38

Dental unit accessories 40

Planmeca Solanna® 40

Planmeca Solanna® Vision 41

Planmeca Lumo™ 42

Planmeca Olo™ 43

Technical specifications 44

Exceptional quality and ergonomic design



An introduction from our President

"It's my pleasure to introduce you to our exceptional range of dental care units – combining the very best in ergonomics with outstanding patient comfort. I'm really proud of our product innovations, and for already half a century we've worked closely with dental professionals to create pioneering dental units that set new standards in our field.

What makes us a bit different is that all core product development and manufacturing takes place in Finland – ensuring unmatched quality and attention to detail at every stage of the process. Our goal is to make your work safer and more pleasant, while providing your patients with the best possible treatment experience.

And we have a dedicated team of R&D professionals behind the scenes, all focused on making the highest quality products to suit your clinical needs. Therefore I'm thrilled to invite you to discover our advanced dental care units and find the perfect one for you."

Heikki Kyöstilä
President and founder
Planmeca Group

Planmeca dental units – created for better patient care

Renowned for their beauty, durability and technical cleverness, Planmeca's dental units are designed with both the dental team and the patient in mind. Our product development is always guided by four core values: ergonomics, safety, comfort and aesthetics. By adhering to these values in everything we do, we have been able to create solutions that let dentists concentrate on providing the best patient care while technology takes care of the rest. We welcome you to explore the exceptional qualities that are a common denominator in all of our dental units.



Easy access, comfortable consultation

Our dental units offer easy access for patients of all sizes and ages and provide comfortable positions for pre- and post-treatment discussions.





Easy entry/exit

The foldable legrest makes it easy to enter and exit the chair – especially important for the elderly and physically challenged patients. To further support patient entry and exit, the chair can be equipped with rotating armrests.

Face-to-face consultation

Our dental units allow you to hold your initial discussion with the patient in a comfortable sitting position, while maintaining eye contact. This helps to create a relaxed atmosphere and build trust. Distractions, such as the instrument console, are kept outside of the patient's direct line of sights.

Ideal ergonomics

We work closely with dental professionals in order to find the best ways to ensure maximum comfort and a smooth workflow. Our dental units allow you to work either two- or four-handedly – always supporting good ergonomics and making your work easier and more efficient.

Supporting an ergonomic workflow

Our dental units have been designed to make everyday work smoother and less stressful. The floating chair with a narrowing backrest and the small cuspidor base enable perfect access to the treatment area, allowing you to maintain an ergonomic working position throughout the day without unnecessary movement or strain. The smooth and wide delivery arm movements let you choose your preferred working position, while the ideally balanced instrument arms guarantee an ergonomic use of instruments, since only small movements are needed to use them. This minimises the strain on your arm, wrist and shoulder.



The working position of your choice – perfect adaptability

- Ideal for both two-handed and four-handed dentistry
- Adapts to all positions between 7 and 3 o'clock
- Enables working in a sitting or standing position

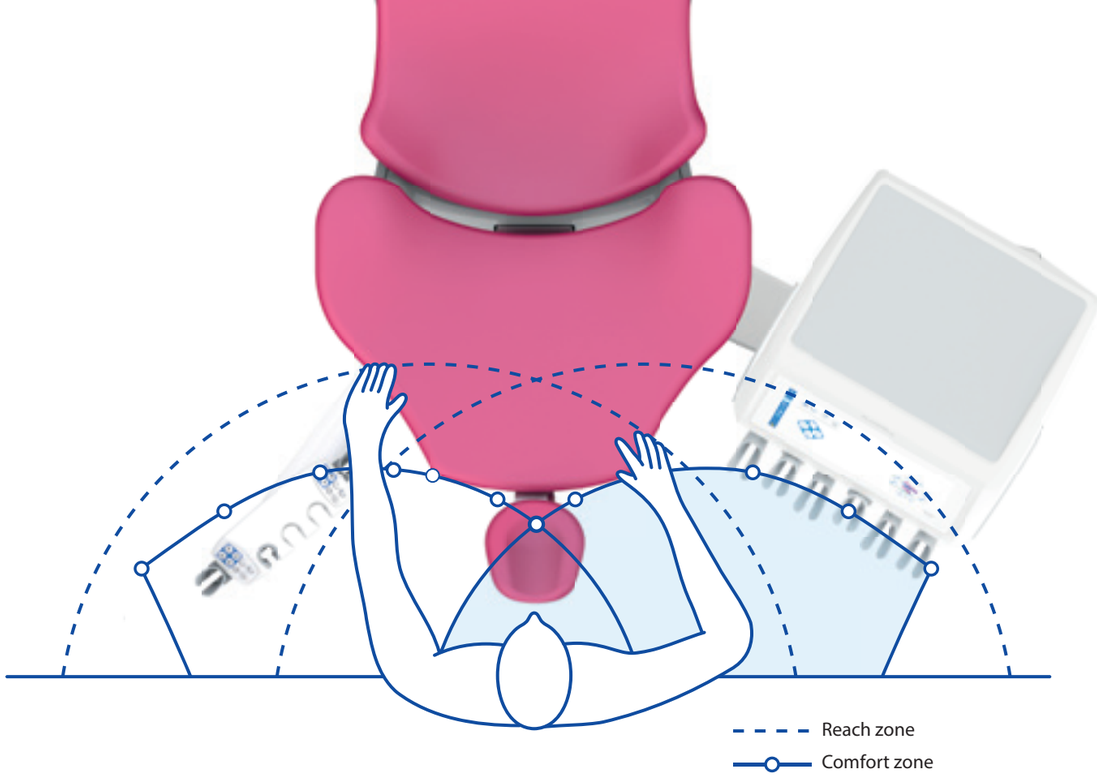





Relaxed patient

Our exceptional innovations make treatment sessions more comfortable and relaxing for your patients – making your work easier. With accurate positioning and support, our dental units help you focus on providing high-quality clinical treatment.

Designed for comfort



Ergonomically designed chair

The dental chair design follows the shape of the patient's body and provides firm and comfortable support. Our dental units can also be fitted with armrests to provide additional patient support.

Unbeatable patient comfort

Planmeca's **Ultra Relax™** upholstery responds to patient weight and body heat for superior patient comfort. This is especially appreciated in longer treatment sessions. A comfortably positioned patient is more relaxed, allowing you to focus on the clinical treatment.

Designed to last

Our strong commitment to R&D guides everything we do. We are passionate about design and always prioritise comfort, safety and ease of use over everything else – and we do so without compromise. Our industry-leading dental units are practical, functional and beautifully designed.



Solid, durable and recyclable aluminium

Lightweight design

All Planmeca dental units have our distinctive clean and simple design. With plenty of space on every side, our highly compact units allow the dental team to work freely and comfortably in their preferred position.

Glossy surfaces, excellent durability

We use aluminium parts and an epoxy paint finish in our dental units for ultimate durability. Their seamless, powder-coated surfaces meet the strictest infection control requirements.

Perfect modularity

All of our units have been designed with the future in mind. That's why it's easy to upgrade our units with the latest features and innovations in dentistry.

Award-winning design

Our aim is to create durable and beautifully designed products that stand the test of time – with unmatched attention to detail. Each product we build is of the highest quality, helping convey a professional image in your dental clinic and building patient trust.

reddot winner 2020

FENNIAprize 20
HONOURABLE MENTION

reddot award 2016
winner

It’s all in the details



Easy patient documentation

All clinical data can be easily accessed, making patient documentation simple and straightforward.

Extensive light field

The **Planmeca Solanna®** operating light provides excellent visibility to every corner of the treatment area.

Comfortable working positions

The wide height adjustment range allows you to work comfortably in a standing position, while the very low chair position also makes it possible to treat patients who are semi-reclined.

Extensive legroom

The small pedestal of the chair and the small cuspidor maximise legroom for both the dentist and assistant – allowing the whole team to get as close as possible to the patient.

Smartly designed instrument console

Our effortless console positioning allows instruments to be placed at the optimal ergonomic position. The console can also be moved to the assistant side for a smooth and efficient workflow. Instruments with quick connectors are interchangeable by user.

Personal settings easily available

Planmeca PlanID™ allows access to personal settings on any dental unit at a clinic with a simple flash of a card.

Ease of use

The intuitive touch panel is straightforward and easy to use with customisable dental unit functions, treatment position and instrument settings.

A comfortable grip and minimised strain

The world-class instrument arms offer optimal balance and support ergonomic instrument use.

Foldable legrest

The automatic legrest makes it easy for patients to enter and exit the chair, ensuring a smooth workflow. It also provides excellent patient comfort and is practical for doctor-patient consultations and prosthodontic treatments.

Unrestricted operator access

The narrow top of the backrest allows the dental team to get as close as possible to the treatment area.

Not all features are available for all dental unit models.
Please see the comparison table on page 45 for further details.



Planmeca operating lights

In dental care every detail matters, and that is why the operating light is an essential working tool. Our operating lights offer superior lighting, great ergonomics, hygienic and hands-free operation as well as many smart functions ensuring a smooth workflow.

Planmeca Solanna®

Perfect visibility over the entire treatment area – with the brightness and colour temperature of your choice.



Planmeca Solanna® Vision

An intelligent light with integrated 4K cameras and microphones that allows you to take both still images and videos easily. A great tool for documentation, consultation and communication.



Stand out with colour

Complement the splendid design of your dental unit by giving it a personal touch with your favourite colours. Select the perfect one from our inspiring collection and create the look of your dreams!

High-quality upholsteries for enduring comfort

The **Comfy™** upholstery is made of durable artificial leather. The thin shape ensures excellent reach to the treatment area and the seamless design allows easy upkeep and enhanced infection control.

Made of extremely durable artificial leather and viscoelastic memory foam, the **Ultra Relax™** upholstery adapts perfectly to the patient's body shape, allowing them to stay relaxed even during the longest treatment sessions.

Beautiful and bright colours

Both the Comfy and Ultra Relax upholsteries come in a wide range of stylish colors.

Our metallic shades add a touch of sparkle to the dental unit. The Gem collection features colours that reflect the light, creating a luxurious effect. Both the metallic shades and the Gem collection are available for Ultra Relax upholsteries.





Fuchsia	Ultra Relax ✔	Comfy ✔
Cassis	Ultra Relax ✔	
Purple	Ultra Relax ✔	Comfy ✔
Red	Ultra Relax ✔	Comfy ✔
Carnival	Ultra Relax ✔	
Sun	Ultra Relax ✔	
Lime	Ultra Relax ✔	Comfy ✔
Green Bean	Ultra Relax ✔	
Metallic Pine	Ultra Relax ✔	
Petrol	Ultra Relax ✔	Comfy ✔
Sky	Ultra Relax ✔	Comfy ✔
Azure	Ultra Relax ✔	Comfy ✔
Steel Blue		Comfy ✔
Deep Sea Blue		Comfy ✔
Metallic Blue	Ultra Relax ✔	
Baltic	Ultra Relax ✔	
Dark Blue		Comfy ✔
Diplomat Blue	Ultra Relax ✔	
Gem Midnight Blue	Ultra Relax ✔	
Hazel		Comfy ✔
Walnut	Ultra Relax ✔	
Coffee		Comfy ✔
Metallic Gold	Ultra Relax ✔	
Metallic Sand	Ultra Relax ✔	
Gem Champagne Sparkle	Ultra Relax ✔	
Metallic Silver	Ultra Relax ✔	
Urban Grey		Comfy ✔
Graphite	Ultra Relax ✔	Comfy ✔
Black	Ultra Relax ✔	Comfy ✔
Gem Carbon Black	Ultra Relax ✔	

The colour samples are indicative only and may vary from actual upholstery colours.

Infection control is a top priority

Infection control and clean water have always been essential elements in our product design and development. Years of close collaboration with leading dental universities in the field of microbiology have resulted in comprehensive and scientifically proven solutions for both external and internal dental unit infection control.



Effortless use

External infection control made easy

The smooth, uniform surfaces of our dental units make cleaning easy, ensuring impeccable external infection control. The metal surfaces are extremely durable and resistant to cleaning agents. All critical components can also be autoclaved, and the bowl can be detached for easy cleaning.



Clean water – always

Our water treatment solutions guarantee that all water entering the patient's mouth is always clean, ensuring a safe environment for both the patients and the dental team.



Superior results for cleaner suction tubes

We have designed an innovative system for cleaning suction tubes and filters. The **Planmeca Suction Tube Cleaning System** (STCS) significantly simplifies and automates the disinfection process of dental units – ensuring a safe treatment environment and a cleaner suction system overall.

The efficiency of the Planmeca STCS has been established in an independent study* conducted at the Dublin Dental University Hospital.



* Boyle MA, O'Donnell MJ, Russell RJ, Galvin N, Swan J, Coleman DC. Overcoming the problem of residual microbial contamination in dental suction units left by conventional disinfection using novel single component suction handpieces in combination with automated flood disinfection. Journal of Dentistry. 2015. 43(10):1268-1279. doi: 10.1016/j.jdent.2015.07.018. PMID: 26248229.

Optimised equipment usage with Planmeca Insights™

Take clinic efficiency to the next level with actionable data and intelligence from your fleet of Planmeca equipment. From single devices to multi-site group practices, ***Planmeca Insights™*** *offers real-time information about device states, usage, and maintenance needs.*

Better planning, training, and decision-making

Extensive device data can be used to confirm that your valuable equipment is maintained correctly and in line with agreed practice. Additionally, detailed usage information offers insight into how and when devices are being used for more informed decision-making. Device-specific cleaning protocols can be monitored through the platform. Data can also be compared across multiple locations for improved clinic management and optimised workflows.



Minimise device downtime

Automated messages on device states or issues encountered can be programmed to notify the right people, such as maintenance personnel. Individual device data can be used to optimise maintenance times and address problems – even before they happen. When necessary, device logs can be used for more detailed analysis of device operation.

Planmeca Insights™ supports Planmeca devices comprehensively. For Planmeca dental units, the platform offers a range of intelligent functionalities, such as:

- Current device states and activity
- Maintenance information
- Usage data
- Workflow information
- Help and error messages
- Monitoring device-specific cleaning protocols

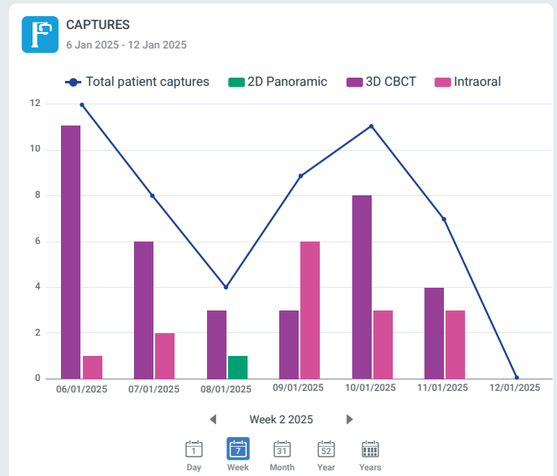

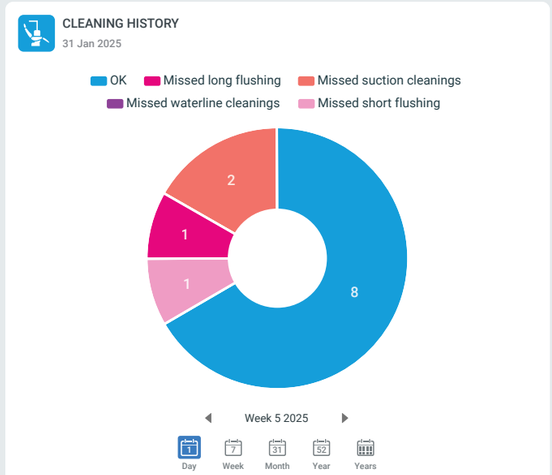





Planmeca Pro dental unit line

The family of "Pros" is designed with top-tier quality materials and intelligence to ensure the future of dental care is in good hands. ***Planmeca Pro50™*** *dental unit features intelligent functionalities that deliver a premium user experience, while the* ***Planmeca Pro50™ Chair*** *combines sturdy construction with elegant design to provide ultimate patient comfort. Explore two of the newest members to the family, a side-lifting* ***Planmeca Pro40™*** *dental unit and a compact, ambidextrous* ***Planmeca Pro50™ S*** *dental unit.*

Which one is right for you?

Planmeca Pro50™

The premium-level unit is designed to showcase dental units with cutting-edge technology, symmetrical ergonomics, quality and infection control. Intelligent functionalities give the user a luxurious experience.

Planmeca Pro50™ S

A compact dental unit with side delivery and hanging tubes designed for ergonomic and efficient workflows in any treatment room.

Planmeca Pro40™

The next generation of Planmeca's renowned side-lifting dental units combining intelligent software, exceptional ergonomics, and proven infection control.

Planmeca Pro50™ Chair

Our sturdy yet elegant patient chair combines functionality, flexibility and ultimate patient comfort.

Feel the next level of dental units



Planmeca Pro50™



Planmeca Pro50™ S



Planmeca Pro40™



Planmeca Pro50™ Chair

Planmeca Pro50™

A dental unit like no other

*With over 50 years of experience in dental equipment design and manufacturing, Planmeca is committed to ongoing development and excellent craftsmanship. The new **Planmeca Pro50™** dental unit is the result of continuous evolution – a dental unit like no other.*

Dynamic ergonomics

The one-of-a-kind, vertically lifting chair of the **Planmeca Pro50™** dental unit can be adjusted anywhere from 39 cm to as high as 89 cm. On top of that, the cuspidor can be rotated to either side of the chair, offering an identical working experience for both left- and right-handed users. This allows dental professionals of all sizes, whether tall or small, to work in their preferred position while sitting or standing.

The slim backrest of the chair and its small pedestal provide plenty of working space around the unit, ensuring that the doctor and the assistant can be as close to the patient's head as possible. The balanced instrument arms guarantee an ergonomic use of instruments.





Friendly user experience

The unit's easy-to-use 7" touch screen ensures effortless navigation through the intuitive user interface. For those seeking a broader view and additional flexibility, the interface can be extended to **Planmeca Halo™** interactive touch screen. It streamlines all facets of daily clinical tasks – from accessing patient data to dental unit management. Additionally, the monitor is a great tool for patient education and allows dental records to be updated in real-time during treatments.



Eye-catching design

Over the years, Planmeca dental units have received several design awards for their functional and recognisable design. In a clinic setting, a skilfully designed, modern-looking dental unit conveys an image of high quality, builds trust and allows your patients to relax.

Planmeca Pro50 features all the best design details that our products are known for. It is Finnish design at its best – compact, elegant, light, silent, comfortable, sturdy, adaptable, and durable.



Planmeca Pro50™ S

Compact structure designed for modern dentistry

***Planmeca Pro50™ S** is a compact and ambidextrous dental unit with side delivery and hanging tubes, which brings ergonomic adjustability, digital integration, and a streamlined design into different treatment environments. It adapts to various working styles with its modular structure and adjustable components. With its connectivity options, Pro50 S supports daily clinical workflows for both users and patients.*

Efficient working comfort for every clinician

The unit supports practical working positions with its slim backrest, compact pedestal, and wide seat height range. The adjustable instrument console and suction arm enable effortless positioning for clinicians of any height and working style. Its left-to-right conversion can be performed smoothly, even while the patient is seated. Pro50 S fits well into both small and larger treatment rooms thanks to its compact dimensions. This gives staff more space to move around the unit.



Digital functions for streamlined workflow

The wide 12.3" user interface offers clear access to patient information and imaging through **Planmeca Romexis®** connectivity. Users can adjust the interface layout to match their preferences. Optional **Planmeca PlanID™** technology provides quick access to personalised settings in multi-user clinics. The unit supports network integration for data flow and usage reporting.

Beautiful design with functional aesthetics

The unit features a coherent design that follows the Pros series and integrates naturally into modern clinical spaces. Its smooth surfaces and colour options support a clean and approachable environment. The aluminium frame offers a durable and hygienic construction that is easy to maintain. The unit's unified shapes and functional details contribute to ease-of-use and maintenance.

Compact size with practical flexibility

Pro50 S is suitable for clinics with limited space due to its compact structure. Its slim build and narrow backrest help maintain working room around the unit. The modular design allows clinics to select the configuration that matches their operational needs. The unit has an open front concept where the chair is positioned in front and instruments remain behind the patient. This configuration allows the treatment area to remain visually open from the patient's perspective.



Feel the future at your fingertips



Planmeca Pro40™

A new era of intelligent side-lifting dental units

Planmeca Pro40™ *is a dental unit with over-the-patient balanced instruments designed to offer ergonomic adjustability, digital integration, and practical patient comfort in one cohesive structure. It supports different working styles with an intuitive user interface and modular features. With built-in infection control functions and connectivity options, Pro40 is designed to fit efficiently into everyday clinical workflows.*

Ergonomics that support every movement

The unit provides a wide movement range and a familiar side-lifting design that supports practical working positions for both the dentist and the assistant. Its floating chair structure increases legroom and improves access around the patient. The assistant has ample working space with clear reach to key instruments, supporting smooth collaboration. Multiple legrest options are available to help position the patient comfortably during treatments.



Smart technology at the heart of care

The 7″ touchscreen interface offers intuitive control with customisable icons and visual guidance. Clinicians can view X-ray images, patient photographs and intraoral camera feeds directly on the display. Personal user profiles can be accessed quickly with ID card sign-in. An optional 15.6″ touch monitor can be added to support treatment communication and patient discussions.

Workflow designed for everyday efficiency

Pro40 includes software features that help structure daily routines and reduce manual steps. Network connectivity supports usage data collection and reporting where needed. Automated continuous waterline cleaning and covered connectors help simplify hygiene procedures. Shared architecture and installation points with **Planmeca Compact™** make upgrades and new installations straightforward.





Planmeca Pro50™ Chair

The patient chair for premium comfort

Planmeca Pro50™ Chair *is a great combination of functionality, flexibility and future-proof details, all wrapped up in a beautiful, timeless design. It is an ideal option for those looking for a sturdy yet lightweight patient chair – offering ultimate comfort for both the dental team and patients. Have a seat!*



Have a seat!

Silent and sturdy

Planmeca Pro50™ Chair is a modern and timeless patient chair featuring all the lightweight and beautiful design details that Planmeca products are known for. The medical-grade motors inside the chair make its movements smooth and silent, ensuring a quiet working environment for the dental team and a relaxing treatment experience for the patient. The chair is built from durable aluminium and its upholstery comes in a wide range of fun and appealing colours.

A smooth and flexible workflow

For those working with a 12 o'clock cabinet or tray, the chair's unique lifting mechanism ensures that the distance from the headrest to the cabinet remains the same at every height and the operating light doesn't need to be readjusted as the chair height changes. What's more, the chair has an optional mobile base, making it easy to move to a new treatment room when necessary.

First-class ergonomics

Planmeca Pro50 Chair offers a wide height range – the patient seat height can be varied between 39 cm and 89 cm. This makes the chair suitable for different users and working styles, allowing dental professionals of all sizes to work sitting (on a regular stool or on a saddle stool) or standing. The small chair base leaves plenty of room for two pairs of legs as well as the foot control and other devices. The additional space, combined with the chair's slim and narrow backrest, allows the dental team to get close to the patient – always in the most ergonomic working position.











Premium patient comfort

Planmeca Pro50 Chair has a folding legrest that provides easy entry and exit and facilitates face-to-face positioning – a feature that is greatly appreciated in doctor-patient consultations. As patients come in different shapes and sizes, the maximum patient weight for the chair is 185 kg.
The **Ultra Relax™** upholstery adapts perfectly to the patient's body shape – allowing them to stay relaxed even during the longest treatment sessions.

From Finland

All Planmeca products are designed and crafted in our own factory in Finland, using the latest technology and the best materials. With decades of experience in dental chair design and manufacturing, we listen closely to customer feedback to continually enhance and refine our products, which are always manufactured under fair working conditions.

Planmeca Compact dental unit line

*Our **Planmeca Compact™ i** dental unit range already has tens of thousands of happy users around the world, and it is continuously evolving to meet the needs of all types of dental clinics and specialties. Our product line includes three options for you to choose from, each of them designed to offer the best ergonomics for the dental team and the most enjoyable treatment experience for patients of all sizes and ages.*



"When you work with a great dental unit, you don't even need to pay attention to it as it lets you concentrate on your work. Unnoticeable in a good way – that's what Planmeca's dental units are.

Dr Johanna Kukila
Helsinki, Finland



Planmeca Compact™ i5



Planmeca Compact™ i Classic



Planmeca Compact™ i3

Which one is right for you?

Planmeca Compact™ i5

Planmeca Compact™ i5 is a sleek and elegant dental unit. The latest generation of the well-known Compact family is designed to last and made to perform.

Planmeca Compact™ i Classic

The modern classic of dentistry – a functional choice offering all the features you need for a smooth and comfortable workflow.

Planmeca Compact™ i3

Our smallest unit, a true space-saver, which allows both right- and left-handed dental professionals to work comfortably in any position.

Planmeca Compact™ i5

Designed to last – made to perform

*The sleek and elegant **Planmeca Compact™ i5** has been designed based on several decades of research and experience. Combining revolutionary technology with luxurious design details, this intelligent unit caters even to the most demanding needs. Lightweight yet powerful, it is the dental unit everyone dreams of.*

The smoothest possible workflow

Planmeca Compact™ i5 has been designed to offer the smoothest possible workflow for the entire dental team. Its lightweight design and smooth movements help you to maintain an ergonomic working position throughout the day. Everything is within easy reach, making everyday work effortless and enjoyable.

Faster routines for a faster patient flow

In Planmeca Compact i5, all essential infection control functions are integrated and neatly organised in their own compartments. The cleaning procedures are automated, and the LED indicator on the dental unit informs about their status. These functions help to speed up infection control, which in turn means a faster patient flow and improved quality assurance. Planmeca Compact i5 is the perfect answer to the growing demands of today's dentistry.

Five generations of continuous improvement

Our **Planmeca Compact™ i** dental unit range has tens of thousands of users around the world. They have provided us with continuous and valuable feedback, which has enabled us to refine our dental unit so that it caters to the needs of today's and tomorrow's dental professionals. Planmeca Compact i5 is the culmination of five generations of continuous improvement.



"One of the reasons I chose **Planmeca Compact™ i5** was its beautiful design. Most dental units are big and heavy, whereas mine looks very modern and slim – even though it is robust and stable.

Dr Thomas Rosner
Graubünden, Switzerland



THE WAY YOU WANT IT

There are as many working preferences as there are dental care professionals. Planmeca Compact i5 offers several delivery systems and a wide instrument range for you to choose from to meet your specific needs and requirements.

1 Over-the-patient delivery arm 520 mm with balanced instruments

2 Over-the-patient delivery arm 340 mm with balanced instruments

3 Over-the-patient delivery arm with hanging tube instruments

4 Side delivery with hanging tube instruments

5 Cart delivery with hanging tube instruments

6 Independent cart with hanging tube instruments













Planmeca Compact™ i Classic

The modern classic of dentistry

Planmeca Compact™ i Classic *is the modern classic of our dental unit range – a functional choice offering all the features and instruments you need for a smooth workflow. Built for comfort and ease of use, it combines the best benefits of our ergonomic and practical design solutions.*

Easy to learn, easy to use

Planmeca Compact™ i Classic has been designed for a smooth workflow and superior ease of use. Just like all our dental units, it is equipped with a simple and intuitive touch panel that guides you in your preferred language and lets you adjust all essential unit, instrument and infection control functions. The dental unit and instruments can also be operated directly from the foot control, leaving your hands free for patient treatment.

Ergonomic instrument use

The unit's balanced instrument arms guarantee an ergonomic workflow, since only small movements are needed to use the instruments. This minimises the strain on your arm, wrist and shoulder. The dental unit can also be equipped with hanging tube instruments. The freely interchangeable instruments and easy console movements allow the unit to be swiftly tailored to meet personal preferences.



A relaxing treatment experience for the patient

Planmeca Compact i Classic always supports a relaxing treatment experience – even through longer visits. The chair design follows the shape of the patient's body and provides firm and comfortable support, while the double-articulated headrest allows comfortable positioning of the patient's head. Armrests can be fitted for additional support. The **Ultra Relax™** upholstery, made of durable artificial leather and viscoelastic memory foam, guarantees extra comfort.



"The **Ultra Relax™** upholstery helps patients feel comfortable, and they often mention it, too. As a user, I feel very comfortable, and the touch screen interface is simply ideal for me.

Dr Narimen Djerbi
Tunis, Tunisia



Planmeca Compact™ i3

Small, swift and clever

*We believe that great ergonomics, a smooth workflow and ease of use should be a necessity, not a luxury. The small, swift and clever **Planmeca Compact™ i3** dental unit is a smart choice for any dentist looking for a space-saving solution. The flexible movement range of the unit's delivery arm allows both right- and left-handed dental professionals to work comfortably in any position.*

Simplicity without sacrificing efficiency

Planmeca Compact™ i3 has been designed to simplify everyday dentistry. Easy to learn and easy to use, it is equipped with an intuitive touch panel that guides you in your preferred language. Thanks to the simplicity of the unit's design, external infection control procedures are also easy to perform. The unit can be customised to individual preferences and upgraded with the features of your choice, such as an integrated intraoral scanner.

From right- to left-hand use in 10 seconds

Planmeca Compact i3 can be switched from right- to left-hand use in just 10 seconds simply by moving the instrument console – without having to move the operating light. This makes it a practical solution for all clinics where several dentists use the same dental unit and space is limited.



A swift and space-saving solution

Planmeca Compact i3 is a truly flexible dental care unit that fits into any clinic layout. Due to its slim design and narrow backrest, the unit offers plenty of working space around it, allowing your team to work comfortably whether sitting or standing. The small instrument console can be positioned above the patient, making it easier to maintain an ergonomic position throughout the day. The unit's swivel function can be used to make fine adjustments according to your preferences.

A practical choice especially for large clinics with several users

The unique **Planmeca PlanID™** sign-in system allows dentists to access their personal settings instantly on any dental unit with a simple flash of a card. This helps clinics maximise their resources and utilise their equipment flexibly, since units no longer need to be assigned to specific users. All usage information is stored in the **Planmeca Romexis®** software – this way, large clinics and chains can benefit from knowing when, how and by whom the unit has been used.



"**Planmeca Compact™ i3** is ergonomic, comfortable and simple to use with a large movement range. Since I have had shoulder issues in the past, I was looking for a unit with over-the-patient delivery, and Planmeca had the best solution for me. I like the beauty and simplicity of the design. The right to left hand conversion is also very practical.

Dr Esther Azoulay
Paris, France

A truly flexible dental unit

- From right to left in 10 seconds
- Wide delivery arm movement range
- Plenty of working space on every side
- Comfortable working positions from 7 o'clock to 3 o'clock
- Swivel function for fine adjustments





Choose your favourite delivery option







Ideal for both two- and four-handed dentistry

Planmeca Solanna®

Exceptional operating lights for brighter workdays

Every detail matters in dental care, and that is why the operating light is an essential working tool. Planmeca operating lights offer superior lighting, great ergonomics, hygienic and hands-free operation as well as many smart functions to ensure a smooth workflow.

Latest LED technology

Our flexible **Planmeca Solanna®** operating light provides perfect visibility over the entire treatment area with the brightness and colour temperature of your choice. Its advanced LED technology and unique mirror optics guarantee extensive light field, uniform light intensity and minimised shadows in all situations, regardless of the distance from the treatment area. The beam's sharp edges make the light eye-friendly for patients.



Usability at its finest

The smooth, three-axis movement of Planmeca Solanna's light head makes it easy and effortless to position, both sitting and standing. The light can be controlled from its innovative handles, the dental unit's user interface or foot control, or with defined hand movements. Light intensity can be adjusted flexibly between 8,000 and 50,000 lux, with three colour temperature options and a composite mode.

Effective infection control

Planmeca Solanna's detachable and autoclavable handles can be cleaned in a washer-disinfector. The light's seamless one-piece aluminium back cover and dustproof light capsule further guarantee optimal infection control.

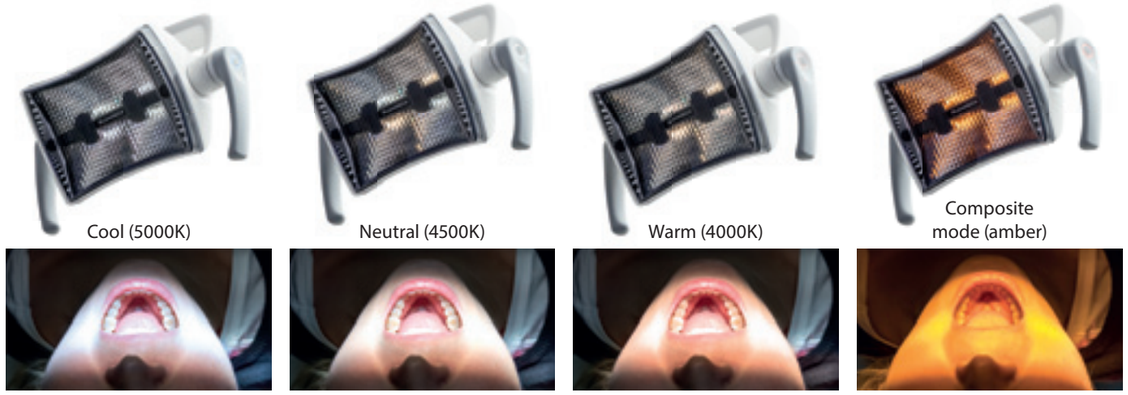

Planmeca Solanna® Vision

Operating light with two integrated 4K cameras

*In addition to having the exceptional lighting features of **Planmeca Solanna®**, our intelligent **Planmeca Solanna® Vision** operating light allows capturing premium-quality images and videos of treatment sessions with its two integrated 4K cameras and microphones. All data is automatically stored in **Planmeca Romexis®** software for further use.*

Exceptional possibilities with still images and videos

Planmeca Solanna® Vision's two integrated cameras have both their unique field of view. Wider lens captures the whole face and surrounding area. Longer lens enables closer access to the oral cavity for more detailed view. The recorded sessions can be used for documentation, remote consultation and student communication. The video transfer is conducted over the LAN network, without any special cabling. As extraoral cameras are no longer needed, the daily workflow becomes faster and more fluent than ever before.



Treatment documentation

- Built-in microphones enable saving diagnostic and treatment information also in audio format
- Data is time-stamped, which allows using the recordings of treatment sessions as evidence

Remote consultation

- Enables online consultation with other experts to avoid unnecessary referrals and visits
  - E.g. oral hygienists consulting dental specialists, students consulting professors...
- Consultations can be recorded for future reference

Patient communication

- Communicate treatment plans on the chairside display
- Visualise treatment progress by showing earlier recorded stills/videos
- Educate patients on their oral health, e.g. daily flossing, brushing, and implant and denture care

Communication with students

- Recorded data can be used for educational purposes and as lecture materials
- Live streaming patient cases to students allows active participation
- Convenient tool for visualising different techniques and treatment progress



Two FOV sizes

Head and surrounding area: 59 x 33 cm

Oral cavity: 32 x 18 cm

Planmeca Lumo™

A form that follows you

*Our anatomically designed **Planmeca Lumo™** dental stool is an excellent ergonomic choice. Its smoothly rotating wheels and multitude of adjustment possibilities ensure optimal working positions for users of all heights and sizes. The stool provides outstanding support and comfort even during the longest workdays.*

Complete adaptability

- Enables smooth movement on all kinds of floors
- Height-adjustable backrest provides lower back support for users of all sizes
- Forward tilting seat minimises the strain and pressure on thighs
- Flexible seat slider provides more space for larger users
- When enabled, synchro backrest follows your every move



Extensive adjustability



Perfect match with your Planmeca dental unit

- The aesthetics and design of **Planmeca Lumo™** and **Planmeca Olo™** uphold the Planmeca standard
- Match with your Planmeca dental unit – choose any colour from our upholstery selection

Planmeca Olo™

Gives your back the best position

***Planmeca Olo™** saddle stool is the newest member of our stools selection. Planmeca Olo gives the back its most natural position during the treatment sessions. The height is easy to adjust for different users. The incomplete circle shape of the foot ring allows close proximity to patient and other stools when needed. The exceptional design of the seat features handles and the uniform design contributes to perfect infection control.*

Complete adjustability

- Natural position for your back
- Easy height adjustment for different users with the foot ring
- Optimally shaped foot ring enables close proximity to patient and other stools
- Adjustable seat angle for best possible working position
- Uniform design for perfect infection control
- Free rotating casters for smooth movement on all kinds of floors



Feel the power of healthy posture



Technical specifications

Planmeca Pro dental unit line

	Planmeca Pro50	Planmeca Pro50 S	Planmeca Pro40	Planmeca Pro50 Chair
Power requirements	100–240 VAC	100–240 VAC	100–240 VAC	100–240 VAC
Mains frequency	50/60 Hz	50/60 Hz	50/60 Hz	50/60 Hz
Water inlet pressure	300–900 kPa (43–130 psi)	-	300–900 kPa (43–130 psi)	-
Air inlet pressure	550–900 kPa (80–130 psi)	550–900 kPa (80–130 psi)	550–900 kPa (80–130 psi)	-
Weight	220 kg (485 lbs)	160–180 kg (353–397 lbs)	220 kg (485 lbs)	88 kg (194 lbs)
Mounting	To be fixed to the floor	To be fixed to the floor	To be fixed to the floor	To be fixed to the floor Mobile version as an option
Frame	Cast aluminium alloy	Cast aluminium alloy	Cast aluminium alloy	Cast aluminium alloy
Colour	White (RAL 9016) Black unit colouring as an option*	White (RAL 9016) Black unit colouring as an option*	White (RAL 9016)	White (RAL 9016)

*The colour changes on some body panels of the unit.

Planmeca Oy
CE 0598 MD Planmeca Pro50

Planmeca Oy
CE 0598 MD Planmeca Pro50 S

Planmeca Oy
CE 0598 MD Planmeca Pro40

Planmeca Oy
CE MD Planmeca Pro50 Chair

Planmeca Compact dental unit line

	Planmeca Compact i5	Planmeca Compact i Classic	Planmeca Compact i3
Power requirements	100 VAC, 115 VAC, 220–240 VAC	100 VAC, 115 VAC, 220–240 VAC	100 VAC, 115 VAC, 220–240 VAC
Mains frequency	50/60 Hz	50/60 Hz	50/60 Hz
Water inlet pressure	300–900 kPa (43–130 psi)	300–900 kPa (43–130 psi)	300–900 kPa (43–130 psi)
Air inlet pressure	550–900 kPa (80–130 psi)	550–900 kPa (80–130 psi)	550–900 kPa (80–130 psi)
Weight	160 kg (353 lbs)	150 kg (331 lbs)	130 kg (287 lbs)
Mounting	To be fixed to the floor	To be fixed to the floor	To be fixed to the floor
Frame	Cast aluminium alloy	Cast aluminium alloy	Cast aluminium alloy
Colour	White (RAL 9016)	White (RAL 9016)	White (RAL 9016)

Planmeca Oy
CE 0598 MD Planmeca Compact i

Planmeca Solanna operating lights

	Planmeca Solanna	Planmeca Solanna Vision
Light beam	220 x 85 mm at distance of 700 mm, ISO9680	
Adjustable intensity	mild (8,000–35,000 lux), strong (8,000–42,000 lux) or glaring (8,000–50,000 lux)	
Colour temperatures	warm (4000K), neutral (4500K) and cool (5000K)	
Composite mode	Composite mode with amber LED	
Colour rendering index	(CRI) > 92	
Mounting options	Planmeca dental units, ceiling mounted, wall mounted	
Connectivity	Planmeca Romexis	
Still imaging	-	Two 4K cameras for capturing still images, 1 MP to over 13 MP
Video imaging	-	Two 4K cameras for capturing videos, up to 30 fps
Lenses	-	Ultra HD high precision compatible lenses
Focus range	-	Optimal working distance 70 cm (27.6 in.) Focus range 8 cm (3.1 in.) or 21 cm (8.2 in.) depending on imaging mode
Image field	-	Head and surrounding area: 59 cm x 33 cm (23.2 x 13.0 in.) Oral cavity: 32 x 18 cm (12.6 x 7.1 in.)
Networking	-	1 Gbit/s LAN
Compatibility	-	Planmeca Romexis 6.0 or newer

Planmeca Oy
CE MD Planmeca Solanna

Comparison

	Planmeca Pro50	Planmeca Pro50 S	Planmeca Pro40	Planmeca Pro50 Chair	Planmeca Compact i5	Planmeca Compact i Classic	Planmeca Compact i3
Delivery type							
Over-the-patient delivery arm 520 mm with balanced instruments	✔		✔		✔	✔	✔
Over-the-patient delivery arm 340 mm with balanced instruments	✔		✔		✔	✔	✔
Over-the-patient delivery arm with hanging tube instruments					✔	✔	✔
Side delivery with hanging tube instruments		✔			✔		
Cart delivery with hanging tube instruments					✔		✔
Independent cart with hanging tube instruments					✔		
Dental unit features							
Left/right conversion	✔	✔			✔	✔	✔
Floating chair			✔		✔	✔	
Floor-mounted chair	✔	✔		✔			✔
Automatic legrest	✔	✔	✔	✔	✔	✔	
Chair swivel							✔
White or black unit colouring	✔	✔					
Ultra Relax™ upholstery	✔	✔	✔	✔	✔	✔	✔
Comfy™ upholstery	✔	✔	✔	✔	✔	✔	✔
Bowl	✔		✔		✔	✔	
Instruments and other options							
Instrument positions	5	6	6		5	5	5
Free instrument positioning (excl. syringe)	✔	✔	✔		✔	✔	✔
Integrated implantology micromotor	✔				✔	✔	✔
Integrated endodontic micromotor	✔	✔	✔		✔	✔	✔
Integrated apex locator					✔	✔	✔
Integrated intraoral scanner	✔	✔	✔		✔	✔	✔
Planmeca Halo™ interactive touch screen	✔		✔				
Touch panel user interface	✔	✔	✔		✔	✔	✔
Console with a wide 12.3" user interface		✔					
User profiles for multiple users	✔	✔	✔		✔	✔	✔
Wireless foot control					✔	✔	
Intraoral X-ray unit integration			✔		✔	✔	
Wet suction system and suction arm with Flexy™ holder				✔			
Infection control features							
Integrated cleaning holders	✔		✔		✔	✔	
Periodical waterline cleaning	✔	✔	✔		✔	✔	✔
Continuous water disinfection	✔		✔		✔	✔	
Automated suction tube cleaning system (the tubes are filled completely)	✔		✔		✔	✔	
Manual suction tube cleaning (aspiration through the tubes)		✔		✔		✔	✔
Integrated containers for disinfectants	✔		✔		✔		
Planmeca Patrol™ by BWT water filtration system	✔		✔		✔	✔	
Networking							
Remote monitoring and diagnosing with Planmeca Romexis® Clinic Management module					✔	✔	✔

Planmeca Oy
CE MD Planmeca Emerald S
CE 0598 MD Planmeca Romexis
CE 0598 MD Planmeca ProX
CE MD Planmeca Lumo
CE MD Planmeca Olo

Planmeca Pro50™, Pro50™ S, Pro50™ Chair, Pro40™

Dental chair movements

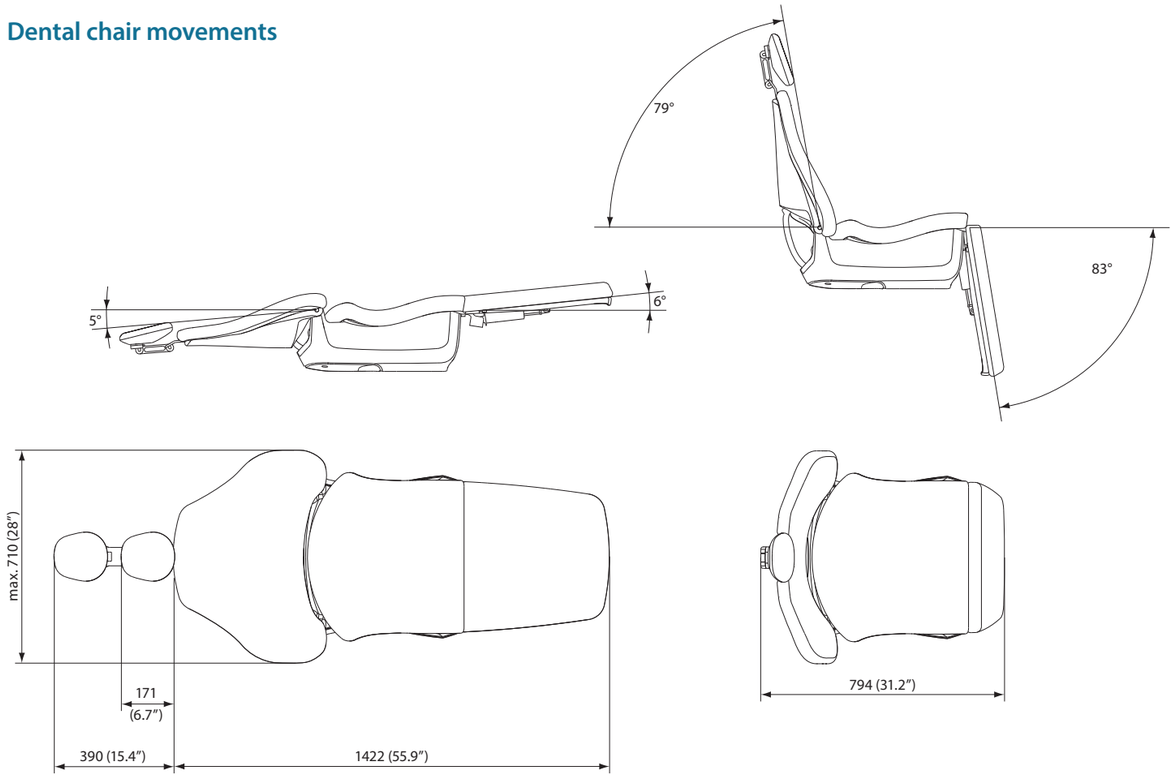

Planmeca Pro50™, Pro50™ S, Pro50™ Chair

Dental chair height

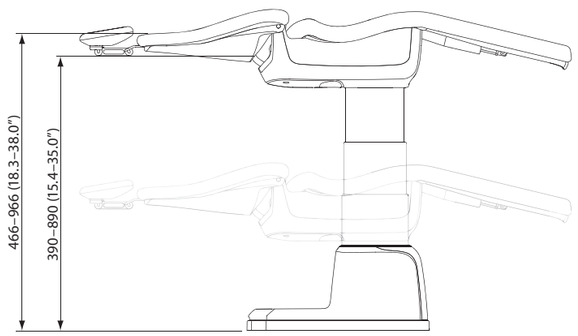

Planmeca Pro50™

Dental unit dimensions

Dental chair movements and dimensions on page 46.

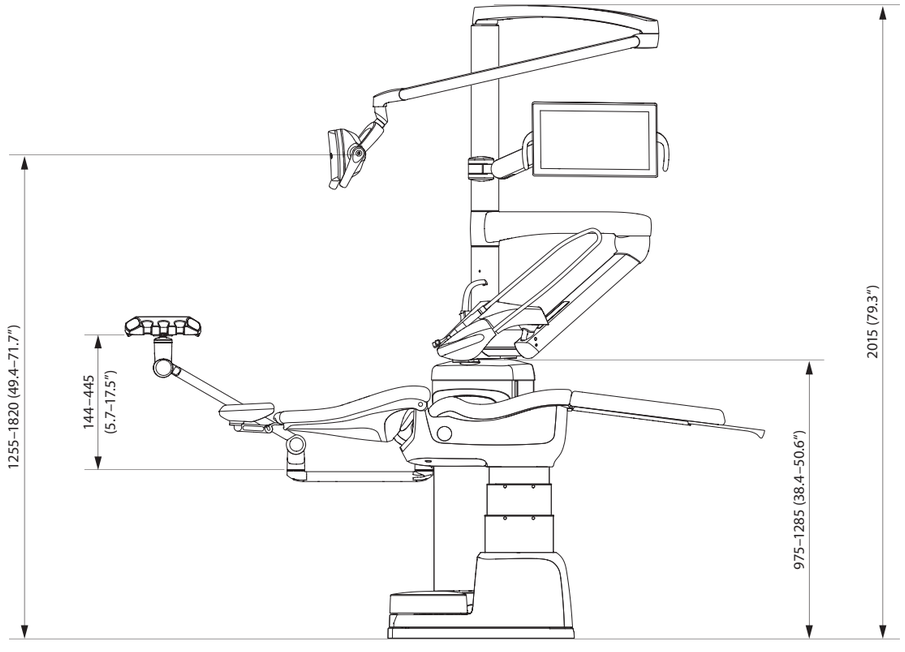

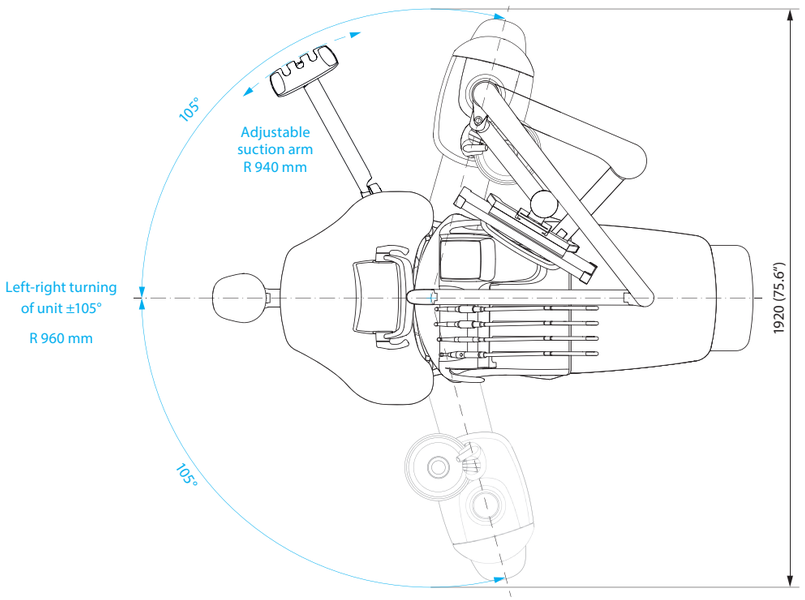

Planmeca Pro50™ S

Dental unit dimensions

Dental chair movements and dimensions on page 46.

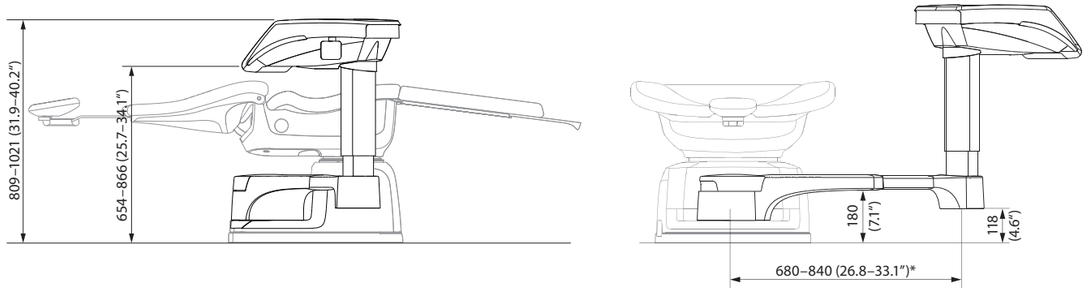

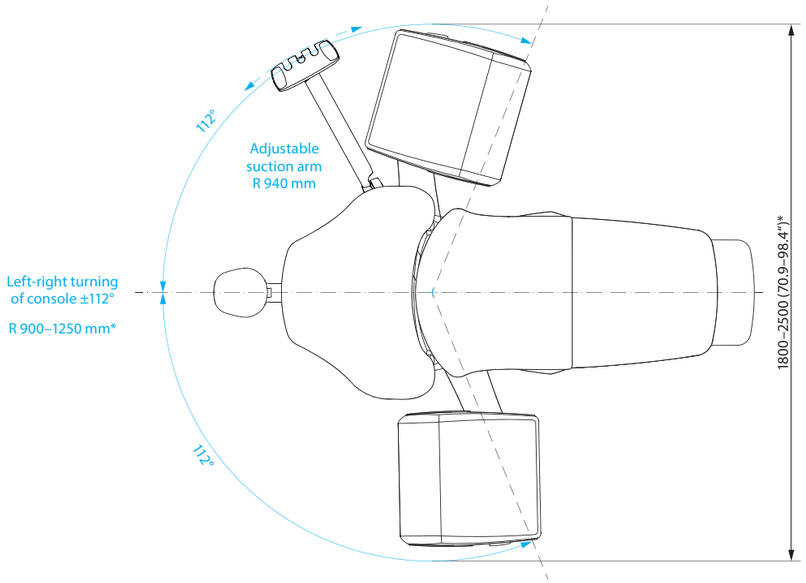

*Rotation range of the console arm must be selected during installation.

Planmeca Pro40™

Dental unit dimensions

Dental chair movements on page 46.

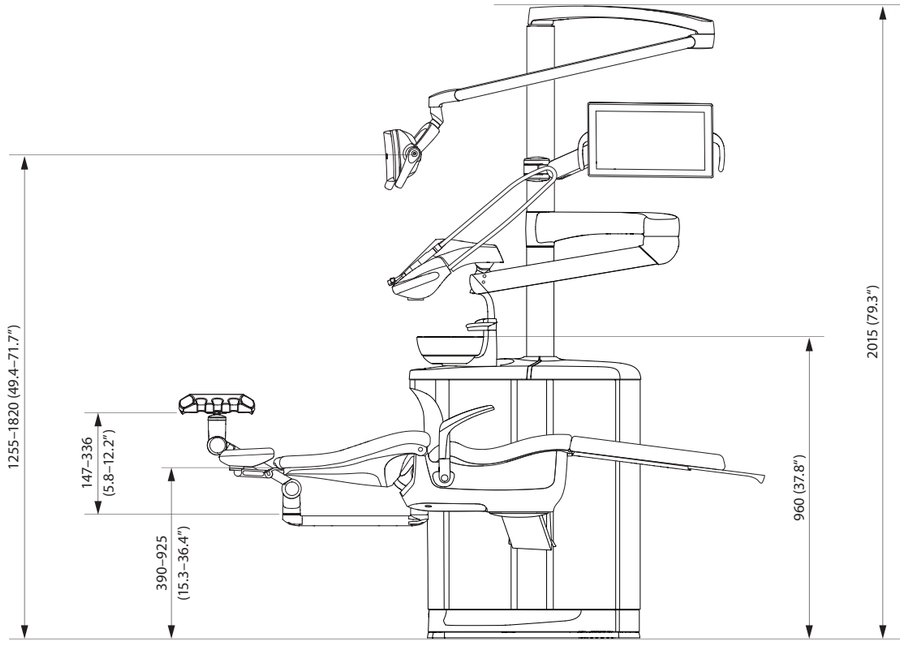

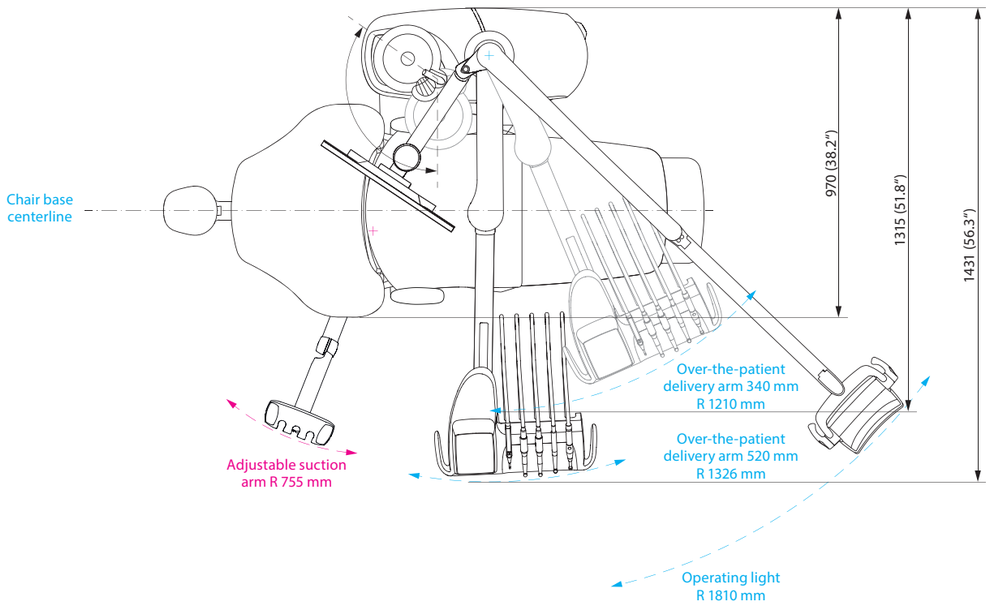

Planmeca Compact™ i5, Planmeca Compact™ i Classic

Dimensions

- **Over-the-patient delivery arm with balanced instruments**
  - Planmeca Compact i5
  - Planmeca Compact i Classic
- **Over-the-patient delivery arm with hanging tube instruments**
  - Planmeca Compact i5
  - Planmeca Compact i Classic
- **Side delivery with hanging tube instruments**
  - Planmeca Compact i5

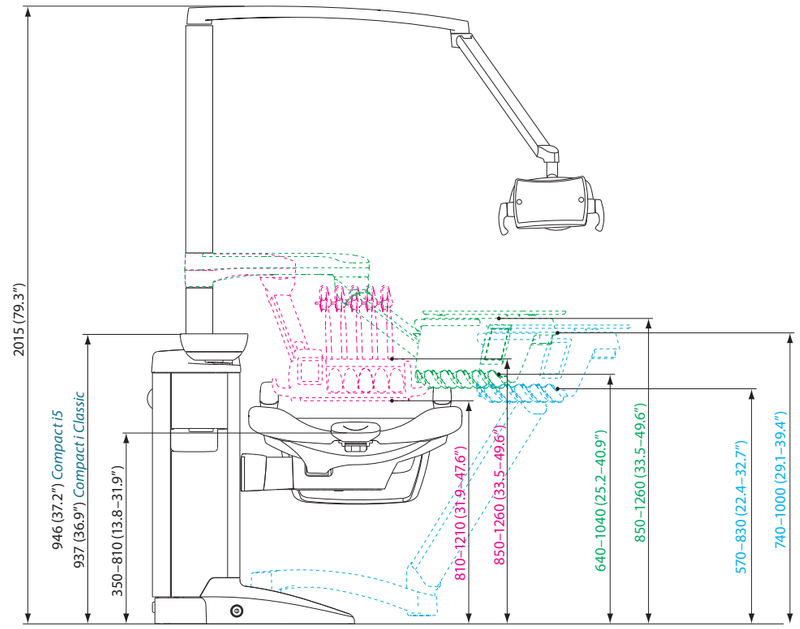

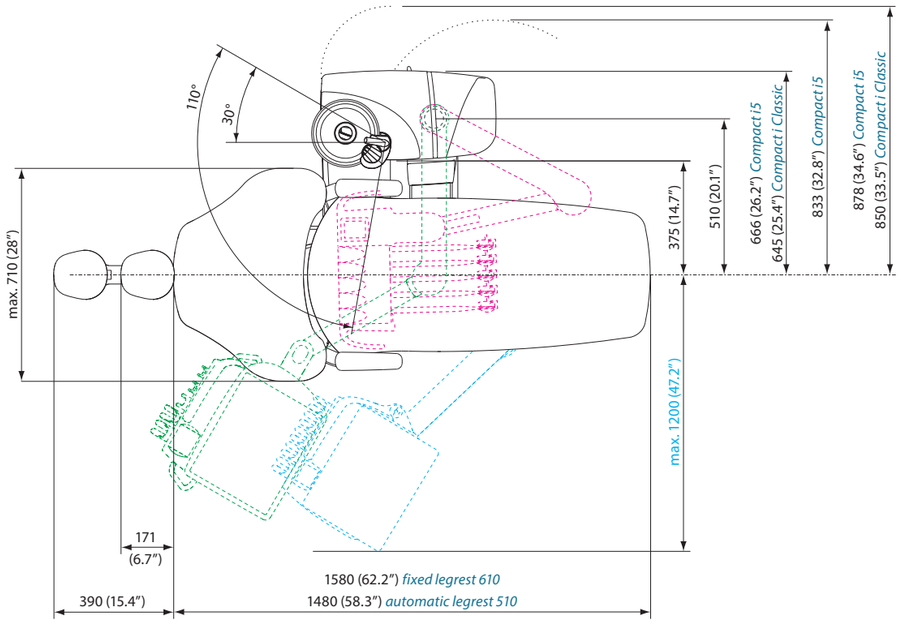

Planmeca Compact™ i3

Dimensions

Over-the-patient delivery arm with balanced instruments

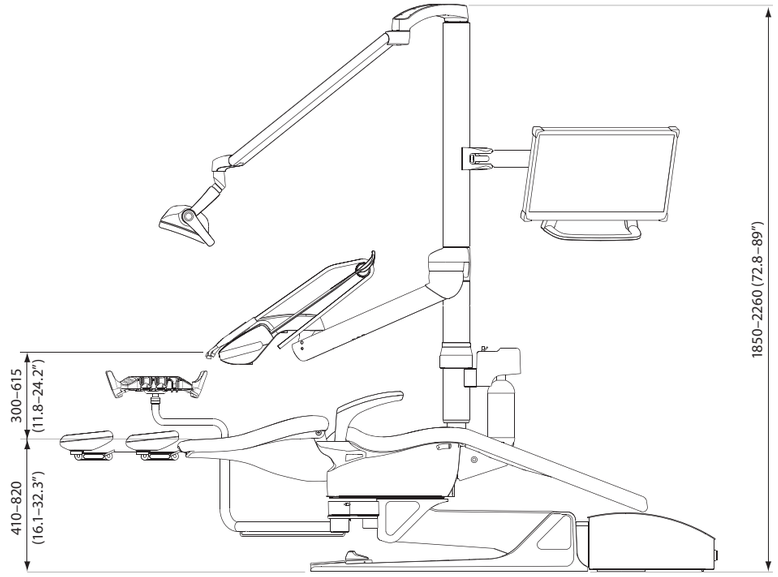

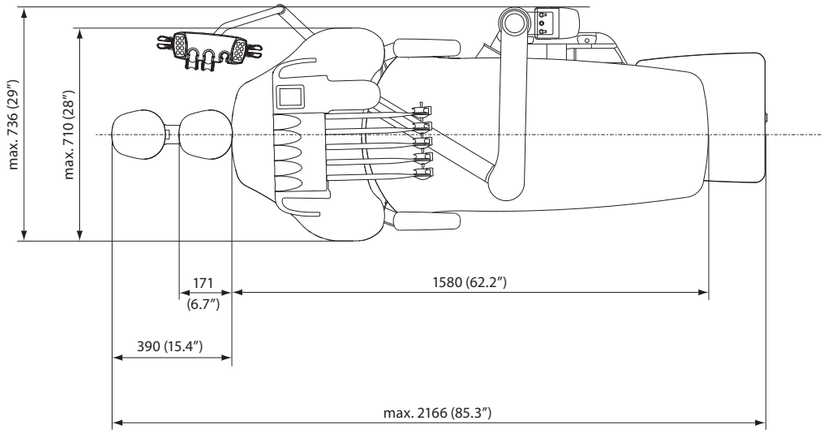



Planmeca Oy designs and manufactures a full line of industry-leading dental equipment, including 3D and 2D imaging devices, CAD/CAM solutions, dental care units and software. Planmeca Oy, the parent company of the Finnish Planmeca Group, is strongly committed to better care through innovation, and it is the largest privately held company in the field.

Follow us on social media!

Scan to read this brochure online

PLANMECA

Asentajankatu 6 | 00880 Helsinki | Finland | tel. +358 20 7795 500 | fax +358 20 7795 555 | sales@planmeca.com | www.planmeca.com

Images may contain optional items not included in standard delivery. Available configurations and features may have country or area specific variations.
Some products displayed above may not be available in all countries or areas. Rights for changes reserved.

All in one, Anatomat Plus, Cobra, Comfy, DentroVac, Digital perfection, Economat Plus, Elegant, Flexy, Mini-dent, Perio Fresh, PlanEasyMill, Planmeca 4D, Planmeca AINO, Planmeca ARA, Planmeca CAD/CAM, Planmeca CALM, Planmeca Cariosity, Planmeca Chair, Planmeca Clarify, Planmeca Cleanic, Planmeca ClinicPatrol by BWT, Planmeca Compact, Planmeca ConBo, Planmeca CORE, Planmeca Creo, Planmeca Emerald, Planmeca FIT, Planmeca Halo, Planmeca Imprex, Planmeca Intra, Planmeca Insights, Planmeca iRomexis, Planmeca Lumion, Planmeca Lumo, Planmeca Maximity, Planmeca Minea, Planmeca Minendo, Planmeca Minetto, Planmeca mRomexis, Planmeca Noma, Planmeca Olo, Planmeca Online, Planmeca Onyx, Planmeca Patrol by BWT, Planmeca Piezon, Planmeca PlanCAD, Planmeca PlanCAM, Planmeca PlanClear, Planmeca PlanDesk, Planmeca PlanID, Planmeca PlanMill, Planmeca Planosil, Planmeca PlanPure, Planmeca PlanScan, Planmeca PlanView, Planmeca Pro40, Planmeca Pro50, Planmeca ProCeph, Planmeca ProFace, Planmeca ProID, Planmeca ProMax, Planmeca ProModel, Planmeca ProOne, Planmeca ProScanner, Planmeca ProSensor, Planmeca ProX, Planmeca PULSE, Planmeca Romexis, Planmeca Serenus, Planmeca SingLED, Planmeca SmartGUI, Planmeca Solanna, Planmeca Somia, Planmeca Sovereign, Planmeca Ultra Low Dose, Planmeca Verity, Planmeca Vision, Planmeca Viso, Planmeca Waterline Cleaning System, Planmeca Xtremity, Proline Dental Stool, ProTouch, Saddle Stool, SmartPan, SmartTouch, Trendy, and Ultra Relax are registered or non-registered trademarks of Planmeca in various countries.

10032811/0926/en